PoWer MIG Series

GeKaMac®

PoWer MIG GS 5000

User Manual

Gedik Welding Inc.
Ankara Caddesi No: 306 Seyhli 34906 Pendik - Istanbul / Turkey
P +90 216 378 50 00 F +90 216 378 20 44
www.gedikwelding.com

This machine is for internal use only.

It complies with the WEEE Directive.

This machine has been designed in accordance with the EN 60974-1 and EN 60974-10 standards.

The machine is safe when installation, operation, and maintenance are performed in accordance with the user manual and regulations. The operator and machine owner are responsible for adhering to safety rules.

Gedik Kaynak San. Ve Tic. A.Ş. assumes no responsibility for safety or CE compliance if any modifications are made to the machine or if safety rules are not followed.

This Class A equipment is not suitable for use in homes and similar residential areas where the power supply is provided by the low-voltage public electricity network.

This machine is not household waste and cannot be disposed of in the trash.

When the machine reaches the end of its service life or becomes obsolete, it must be disposed of in accordance with regulations.

COMPLIES WITH THE WEEE DIRECTIVE.

Eco Design Statement

This machine has been designed and manufactured in accordance with the requirements of the 2009/125/EC Eco Design Directive concerning the environmentally friendly design of energy-related products.

Accordingly, machines with an idle mode are as follows.

	Idle Mode
MMA	**X**
MIG	√
TIG	√
Plazma	√
SAW	**Out of Scope**

Efficiency measurements should be conducted only on the power unit. The water cooling system should be disabled. For more information on measurements and machine settings, Gedik Kaynak Sanayi ve Ticaret A.Ş. should be consulted.

AT UYGUNLUK BEYANI

EU DECLARATION OF CONFORMITY

Bu uygunluk beyanı yalnızca imalatçının sorumluluğu altında düzenlenir.

This declaration of conformity is issued under the sole responsibility of the manufacturer.

İstanbul, Turkey, 08.03.2024

İmalatçı / Manufacturer

GEDİK KAYNAK SANAYİ ve TİCARET A.Ş.

Ankara Cad. No.306 Seyhli Pendik ISTANBUL TURKIYE

Ürün / Product	ARC WELDING MACHINE
Marka-Model / Brand- Model	POWER MIG GS 5000

Yukarıda tanımlanan beyanın nesnesi ilgili uyumlaştırılmış AB mevzuatı ile uyumludur.

The object of the declaration described above, is in conformity with the relevant union harmonisation legislation.

Direktifler / Directives 2014/30/EU & 2014/35/EU & 2009/125/EC

Uyumlaştırılmış standartlar ve uygunluğun deklare edilmesiyle ilişkili diğer referanslar.

References to the relevant harmonised standarts used and references to the other technical specifications in relation to which conformity is declared.

EN IEC 60974-1:2018+A1:2019
EN 60974-10:2014+A1:2015

Bu ekipman, talimatlara uygun kurulduğunda, bakımı yapıldığında ve kullanıldığında belirtilen standartlara uygundur. Makine üzerinde bir değişiklik yapıldığında veya yanlış kullanımda deklarasyon geçersiz olur.

The equipment is in compliance with pertinent legislation when installed, utilized, and maintained in accordance with the enclosed instructions. This declaration will be invalid under any modification or improper use.

İmalatçı Adına imzalayan / Signed for and on behalf of:

Hatice Özel, Equipment Business Unit Director

Dear Customer

This instruction manual will help you get to know your new machine. Read the manual carefully and you will soon be familiar with all the many great features of your new product. Meanwhile, please remember well safety rules and operate as instruction.

If you treat your product carefully, this definitely helps to prolong its enduring quality and reliability – things which are both essential prerequisites for getting outstanding results.

Production specification may change without advance notice.

The model you purchase is for:

- ☐ POWER MIG GS 5000

Please find corresponding models from the "Contents".

Important:
Please take special note of safety rules and operate as instruction in case of damage and serious injury.

Safety Rules

Danger!

“Danger” indicates an imminently hazardous situation which, if not avoided, will result in death or serious injury.

Warning!

“Warning!” indicates a possible hazardous situation which, if not avoided, could result in death or serious injury. The possible hazards are explained in the text.

Caution!

“Caution” indicates a possible hazardous situation which, if not avoided, may result in slight or moderate injury.

Note!

“Note!” indicates a situation which implies a risk of impaired welding result and damage to the equipment.

Important!

“Important!” indicates practical tips and other useful special-message. It is no signal word for a harmful or dangerous situation.

Utilisation for intended purpose only

- The machine may only be used for jobs as defined by the “Intended purpose”.
- Utilisation for any other purpose, or in any other manner, shall be deemed to be “not in accordance with the intended purpose”. The manufacturer shall not be liable for any damage resulting from such improper use.

Safety signs

- All the safety instructions and danger warnings on the machine must be kept in legible condition, not removed, not be covered, pasted or painted cover.

Safety inspection

- The owner/operator is obliged to perform safety inspection at regular intervals.
- The manufacturer also recommends every 3-6 months for regular maintenance of power sources.

Electric shock can kill

- Touching live electrical parts can cause fatal shocks or severe burns. The electrode and work circuit is electrically live whenever the output is on. The input power circuit and machine internal circuits are also live when power is on. In MIG/MAG welding, the wire, drive rollers, wire feed housing and all metal parts touching the welding wire are electrically live. Incorrectly installed or improperly grounded equipment is a hazard.
- Do not touch live electrical parts of the welding circuit, electrodes and wires with your bare skin or wet clothing.
- The operator must wear dry hole-free insulating welding gloves and body protection while performs the welding.
- Insulate yourself from work and ground using dry insulating protection which is large enough to prevent you full area of physical contact with the work or ground.
- Connect the primary input cable according to rules. Disconnect input power

or stop machine before installing or maintenance.

- If welding must be performed under electrically hazardous conditions as follow: in damp locations or wearing wet clothing; on metal structures such as floors, gratings, or scaffolds; when in cramped positions such as sitting, kneeling, or lying; or in occasion when there is a high risk of unavoidable or accidental contact with the work piece or ground. Must use additional safety precautions: semiautomatic DC constant voltage (wire) welder, DC manual (Stick) welder and AC welder with reduced open-load voltage.
- Maintain the electrode holder, ground clamp, welding cable and welding machine in good, safe operating condition. Replace damaged part immediately.

Electric and magnetic fields (EMF) may be dangerous

- If electromagnetic interference is found to be occurring, the operator is obliged to examine any possible electromagnetic problems that may occur on equipment as follow:

- minas, signal and data-transmission leads
- IT and telecoms equipment
- measurement and calibration devices
- Wearers of pacemakers

- Measures for minimizing or preventing EMC problems:

– Mains supply

If electromagnetic interference still occurs, despite the fact that the mains connection in accordance with the regulations, take additional measures

– Welding cables

Keep these as short as possible

Connect the work cable to the work piece as close as possible to the area being welded.

Lay tem well away from other cables.

Do not place your body between your electrode and work cables.

– Equipotential bonding

– Workpiece grounding (earthing)

– Shielding

Shield the entire welding equipment and other equipment nearby.

ARC rays can burn.

- Visible and invisible rays can burn eyes and skin.
- Wear an approved welding helmet or suitable clothing made from durable flame-resistant material (leather, heavy cotton, or wool) to protect your eyes and skin from arc rays and sparks when welding or watching.
- Use protective screens or barriers to protect other nearby personnel with suitable, non-flammable screening and/or warn them not to watch the arc nor expose themselves to the arc rays or to hot spatter or material.

Fumes and gases can be dangerous

- Welding may produce fumes and gases, breathing these fumes and gases can be hazardous to your health.
- When welding, keep your head out of the fume. If inside, ventilate the area at the arc to keep fumes and gases away from the breathing zone. If ventilation

is not good, wear an approved air-supplied respirator.

- Work in a confined space only if it is well ventilated, or while wearing an air-supplied respirator.
- Welding fumes and gases can displace air and lower the oxygen level causing injury or death. Always use enough ventilation, especially in confined areas, to insure breathing air is safe.

Welding and cutting sparks can cause fire or explosion.

- When not welding, make sure the electrode circuit is not touching the work or ground. Accidental contact can cause sparks, explosion, overheating, or fire. Make sure the area is safe before doing any welding.
- Welding and cutting on closed containers, such as tanks, drums, or containers, can cause them to blow up. Make sure proper steps have been taken.
- When pressure gas is used at the work site, special precautions are required to prevent hazardous situations.
- Connect work cable to the work as close to the welding zone as practical to prevent welding current from passing too long and creating fire hazards or overheat.
- Wear oil-free protective garments such as leather gloves, heavy shirt, cuffless trousers, high shoes, and a cap. Wear ear plugs when welding out of position or in confined places. Always wear safety glasses with side shields when in a welding area.
- Be attention that welding sparks and hot materials from welding can easily go through small cracks and openings to adjacent areas and start a fire. Remove fire hazardous from the welding area, if not possible, cover them thoroughly. Do not weld where flying sparks can strike flammable material and where the atmosphere may contain flammable dust, gas, or liquid vapors (such as gasoline).
- Protect yourself and others from flying sparks and hot metal. Remove any combustibles from operator before perform any welding.
- Keep a fire extinguisher readily available.
- Empty containers, tanks, drums, or pipes which have combustibles before perform welding.
- Remove stick electrode from electrode holder or cut off welding wire at contact tip when not in use.
- Apply correct fuses or circuit breakers. Do not oversize or bypass them.

Cylinder can explode if damaged.

- Pressure gas cylinders contain gas under high pressure. If damaged, a cylinder can explode. Since gas cylinders are normally part of the welding process, be sure to treat them carefully.
- Cylinders should be located away from areas where they may be struck or subjected to physical damage. Use proper equipment, procedures, and sufficient number of persons to lift and move cylinders.
- Always install cylinders in an upright position by securing to a stationary support or cylinder rack to prevent falling over or tipping.
- Keep a safe distance from arc welding or cutting operations and any other

source of heat, sparks, or flame.

- No touching cylinder by welding electrode, electrode holder or any other electrically “hot” parts. Do not drape welding cables or welding torches over a gas cylinder.
- Use only correct compressed gas cylinders, regulators, hoses, and fittings designed for the process used; maintain them and associated parts in good condition.
- Use only compressed gas cylinders containing the correct shielding gas for the and properly operating regulators designed for the gas and pressure used. All hoses, fittings, etc. should be suitable for the application and maintained in good condition.
- Open the cylinder valve slowly and keep your head and face away from the cylinder valve outlet.
- Valve protection caps should be kept in place over valve expect when the cylinder is in use or connected for use.

Hot parts can burn

- Do not touch hot parts with bare hand or skin.
- Ensure equipment is cooled down before perform any work.
- If touching hot parts is needed, use proper tools and/or wear heavy, insulated welding gloves and clothing to prevent burns.

Flying metal or dirt can injure eyes

- When welding, chipping, wire brushing, and grinding can cause sparks and flying metal. It can hurt your eyes.
- Remember wear appropriate safety glasses with side shields when in welding zone, even under your welding helmet.

Noise can damage hearing

- Noise from some processes or equipment can damage hearing.
- Remember wear approved ear protection to protect ears if noise level is high.

Moving parts can injure

- Stay away from moving parts such as fans.
- Stay away from pinch points such as drive rolls.
- Keep all doors, panels, covers, and guards closed and securely in place.
- Have only qualified persons remove doors, panels, covers, or guards for servicing and maintenance.
- Reinstall doors, panels, covers, or guards when servicing and maintenance is finished and before reconnecting input power.

Overuse can cause overheating

- Use machine follow duty cycle. Reduce current or reduce duty cycle before starting to weld again.
- Allow cooling period.
- Do not block or filter airflow to unit.

Safety markings

Equipment with CE-markings fulfils the basic requirements of the Low-Voltage and Electromagnetic Compatibility Guideline (e.g. relevant product standards according to EN 60 974).

Equipment with CCC markings meets the requirements of implementations rules for China compulsory certification.

Contents

1 - GENERAL REMARKS 9

1-1Power source features 9

1-2 Functional principle 9

1-3 Output characteristics 9

1-4 Duty cycle 10

1-5Applications 10

1-6Warning label 11

2 –VERSIONS BRIEFS 12

3 -BEFORE COMMISSIONING 12

3-1Utilization for intended purpose only 13

3-2 Machine installation rules 13

3-3 Power source connection 13

3-4 Welding cables instruction 13

4 - POWER MIG GS 5000 15

4-1 System components 15

4-2 Basic equipments for welding 15

4-3 Control panel 16

4-4 Interface 20

4-5Wire feeder 21

4-6 Water cooling system 26

4-7 Installation 27

4-8 MIG/P-MIG welding process and operating 34

4-9 STICK (MMA) welding process and operating 42

4-10 TIG welding process and operating. 44

4-11 Gouging process and operating 46

4-12 Technical data 47

4-13 Disassembly and reassembly. 49

5-TROUBLE SHOOTING 52

6 –CARE AND MAINTENANCE 54

7 - BASIC WELDING TECHNIQUE 55

7-1 MIG (GMAW/FCAW) welding technique 55

7-2 TIG welding technique 61

7-3 SMAW (Stick) welding technique 65

7-4 Gouging technique guide 68

1 - GENERAL REMARKS

This series of power sources apply IGBT soft switch inverter technology. Its internal control system applies digital signal processor which ensures quick response to any change during the welding process so as to achieve precise control of welding process and ensure optimal welding results.

1-1Power source features

This series of power sources are microprocessor controlled and apply MCU + DSP control technology to improve the control precision. The strong ability of arc self-adjustment ensures a highly stable welding current against grid fluctuation and arc length change to get optimal results.

Highlights as follows:

- User friendly interface, synergic, easily control;
- Embedded welding expert database, automatic intelligent combination of parameters
- To achieve beautiful ripple pattern of welding seam with the function of double pulse MIG
- Store 100 sets of user-defined parameters, save the operator's time
- Perfect functions of starting arc and reducing melting ball while stopping arc
- Special 4-step mode is suitable for welding metal with good thermal conductivity, with perfect welding quality when starting arc and stopping arc
- Multiple protection functions
- Fully digitalized wire feeding control system to ensure stable and precise wire feeding
- Fan-on demand cooling system operates when needed to extend the service life of fan
- Advanced digital communication interfaces for robotic system and automation system
- Digital torch with quick and convenient adjustment

1-2 Functional principle

This series of power sources adopt IGBT soft switch inverter technology to improve the dynamic response rate and make the machines with small size and light weight. The control circuit's closed-loop control makes the power source enjoy strong ability against power grid fluctuation and perfect welding performance. The schematic diagram is as shown in Fig. 1-2-1:

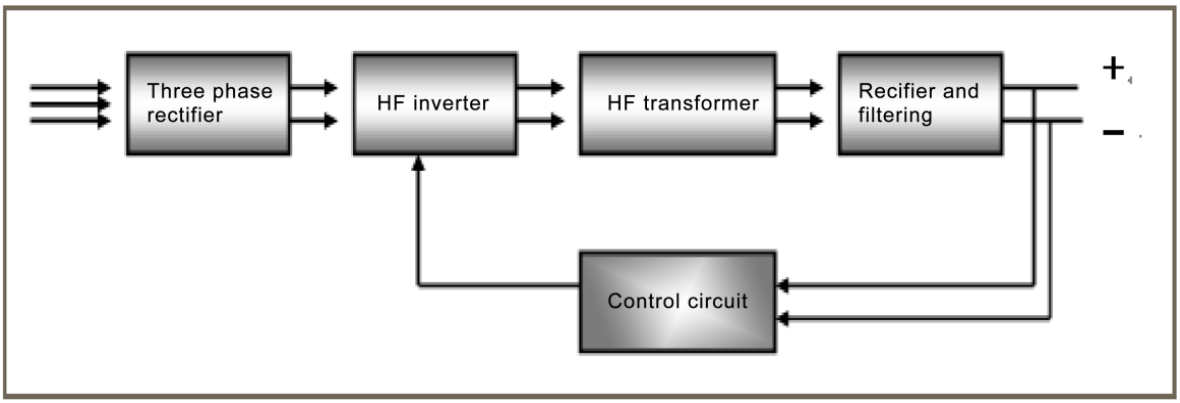

Fig.1-2-1: Schematic diagram

1-3 Output characteristics

Output characteristics as Fig.1-3-1:

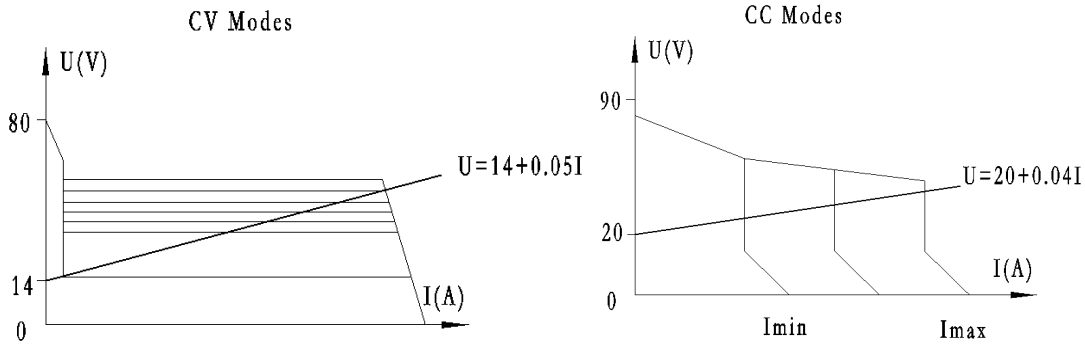

Fig.1-3-1: Output characteristics

1-4 Duty cycle

Duty cycle is percentage of 10 minutes that a machine can weld at rated load without overheating. If overheats, thermostat(s) will open, output stops. Wait for fifteen minutes for the machine to cool down. Reduce amperage or duty cycle before welding.

Note! Exceeding duty cycle can damage the machine and greatly reduce its lifespan

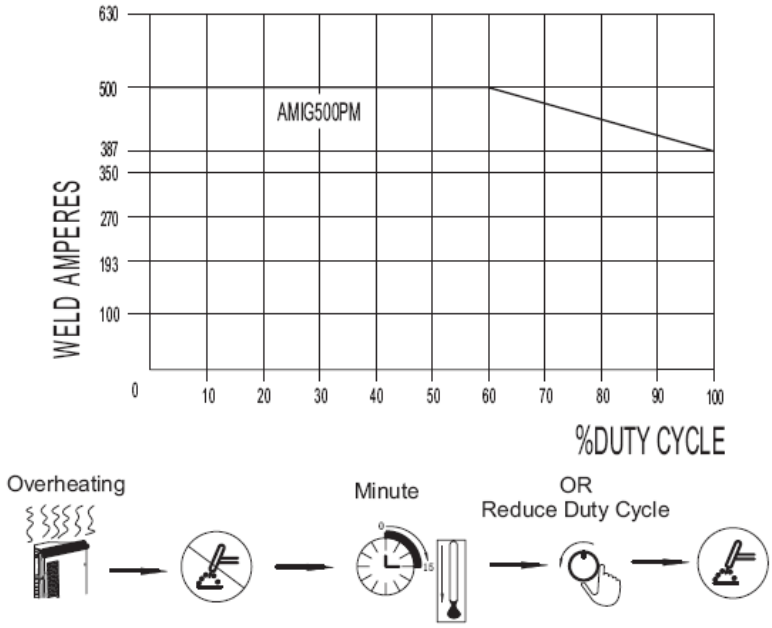

Fig.1-4-1: Duty cycle

1-5Applications

This series of machines have many welding processes and can weld most of the metal materials, including carbon steel, stainless steel, aluminum and Al-Mg alloy, copper and alloy, etc.

Recommended areas of use as follows:

- Automobile and car manufacture industry
- Chemical structure and engineering
- Boiler pressure vessel manufacture

- Shipbuilding and offshore engineering
- Electric power construction
- Vehicle manufacturing
- Mechanical industry
- Other industries

1-6Warning label

The warning label is affixed on the top of machine.

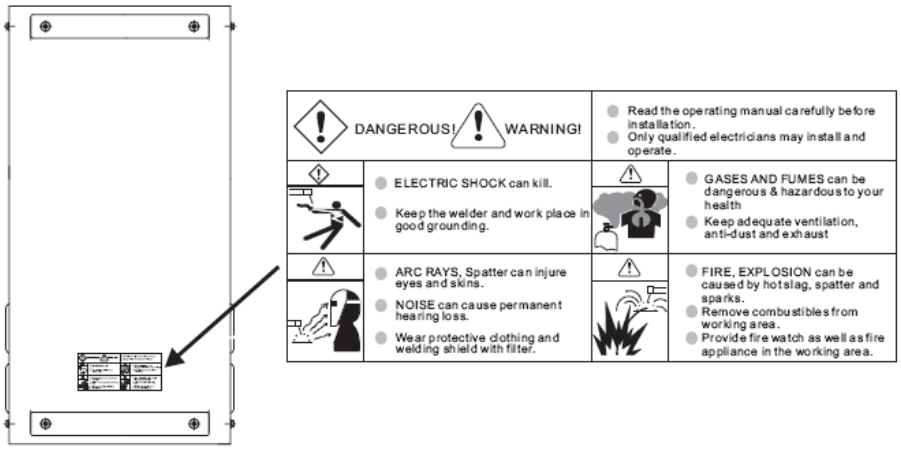

Fig. 1-6-1: Warning label

2 –VERSIONS BRIEFS

Professional welding of special materials requires special welding parameters. Different models of the power sources are matched to different weldings.

3 -BEFORE COMMISSIONING

Warning! Operating the equipment incorrectly can cause serious injury and damage. Do not use the

functions described here until you have read and completely understood “safety rules”.

3-1Utilization for intended purpose only

The power source may only be used for MIG, P-MIG, STICK, TIG and Gouging. Utilization for other purposes, or in any other manner, shall be deemed to be "not in accordance with the intended purpose". The manufacturer shall not be liable for any damage resulting from such improper use. Operate, inspect and maintain should follow all the instructions given in this manual.

3-2 Machine installation rules

According to test, protection degree of this power source is IP21S (optional IP23S). However, the internal key components must be protected from direct soaking.

> ⚠ **Warning!** A machine that topples over or falls from its stand can cause injury. Place equipment on an even, firm floor in such a way that it stands firmly.

The venting duct is very important for safety protections. When choosing the machine location, make sure it is possible for the cooling air to freely enter and exit through the louvers on the front and back of machine. Any electro conductive metallic dust like drillings must not be allowed to get sucked into the machine.

3-3 Power source connection

- The power source is designed to run on the voltage given on the nameplate.
- The mains cables and plugs must be mounted in accordance with the relevant technical standards.
- The power supply sockets that come with power source are designed to use strictly according to the marked voltages.

> ☛ **Note!** Inadequately dimensioned electrical installations can lead to serious damage. The mains lead, and its fuse protection, must be dimensioned in accordance with the local power supply. The technical data shown on the nameplate shall apply.

3-4 Welding cables instruction

When welding, please pay attention to the followings:
a. The welding cables should be kept as short as possible;
b. If extended cable is used, please do as shown in Fig. 3-4-1.

Wrong Coil the excess ground cable and welding cable in same direction respectively.	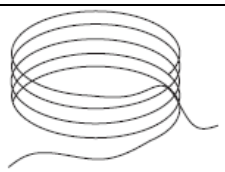

Correct Straighten the ground cable and welding cable and make them close to each other. Bundle the ground cable and welding cable together, running the wires close to the ground.	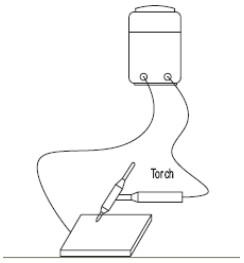
Correct When the excess cables are only be used by rolling up, coil the cables to two windings in reverse direction and overlap them. The number of turns for A is same as the number for B. Handle the welding cable and ground cable according to above-mentioned method.	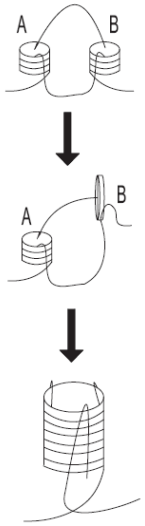

Fig. 3-4-1: Welding cables instruction

4 - POWER MIG GS 5000

4-1 System components

PoWer MIG GS 5000 can be equipped with many different accessories and can be used in different special sites with different configurations.

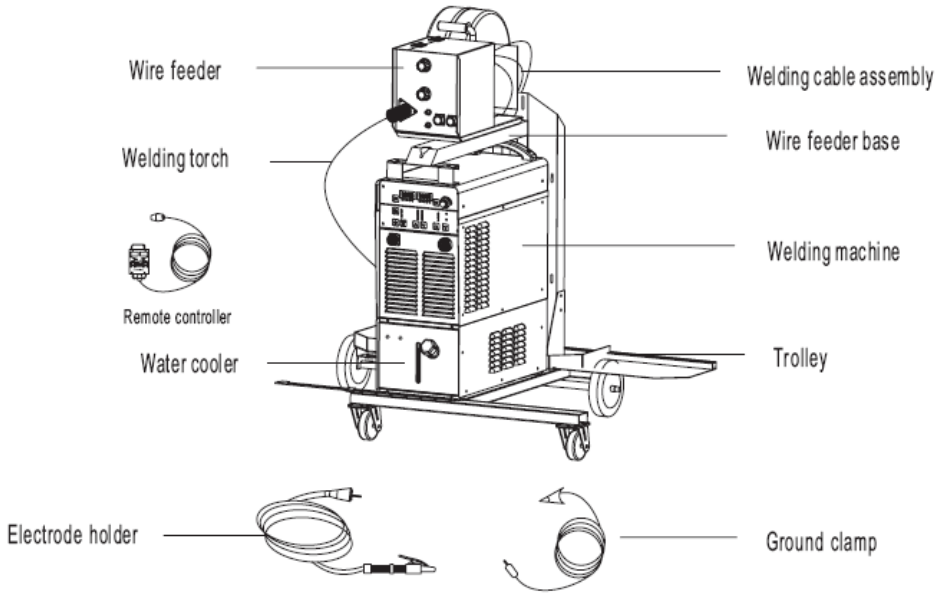

Fig. 4-1-1: System components

4-2 Basic equipments for welding

Only be equipped with the necessary accessories, can the power source POWER MIG GS 5000 operate well. The following is the needed accessories list.

MIG/P-MIG welding

- Power source
- Ground cable
- Welding torch
- CO2 gas regulator, gas hose, gas cylinder (to supply the machine with shielding gas)
- Wire feeder
- Welding wire

TIG welding

- Power source
- Ground cable
- TIG welding torch with air valve switch
- Gas regulator, gas hose, gas cylinder (to supply the machine with shielding gas)
- Welding wire

STICK welding

- Power source
- Ground cable
- Electrode holder

- Electrode

Gouging

- Power source
- Ground cable
- Carbon arc gouging torch
- Gas regulator, gas hose, gas cylinder (to supply the machine with shielding gas)
- Carbon rod

4-3 Control panel

The functions on the control panels are all arranged in a very logical way. The various modes and parameters needed for welding are easy to select by pressing the appropriate button; parameters are easy to be adjusted by rotating encoder. Synergic adjustment makes the complicated operation much easier.

Note! Some described parameters in this manual may be slightly different from the power source, some identification may be slightly different from power source identification, but the manner of working is the same.

Warning! Operating the equipment incorrectly can cause serious injury and damage. Do not use the functions described here until you have read and completely understood all content of this manual.

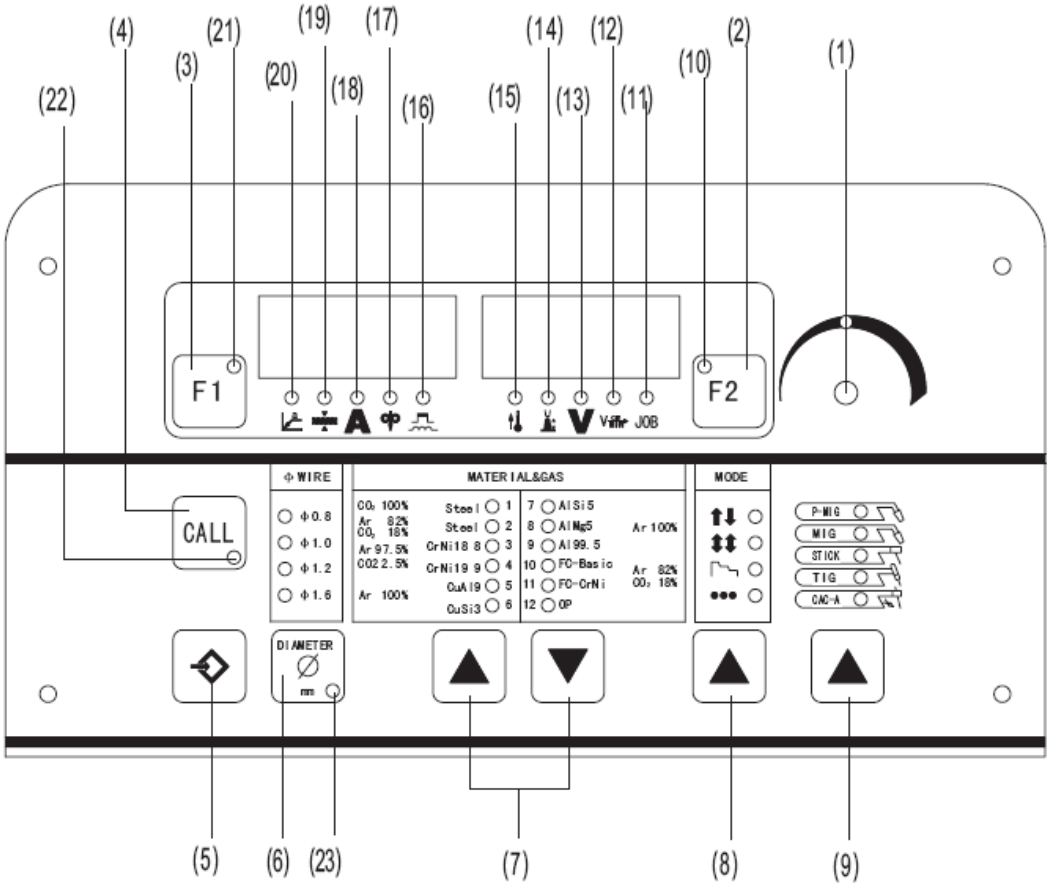

Fig. 4-3-1: Control panel

(1) Adjustment knob

Adjust the parameters. When the light is on, this knob can be used to adjust parameters of selected item.

Important! Values increase in clockwise direction while values decrease in anti-clockwise rotation. To turn the knob left or right while pressing it will achieve quick adjustment.

(2) Parameters selection button F2

Press this button, one parameter indicator light is on, the corresponding parameter is chosen; keep pressing this button can switch among the following parameters:

- Temperature indicator for the mains
- Arc length adjustment
- Welding voltage
- Welding speed
- Job (Channel) No.

If both the indicators of parameter selection button and the adjustment knob (1) are on, the indicated/ selected parameter can be altered with the adjustment knob (1).

(3) Parameters selection button F1

Press this button, one parameter indicator light is on and the corresponding parameter is chosen; keep pressing this button can switch among the following parameters:

- "a" dimension
- Sheet thickness
- Welding current
- Welding speed
- Peak current/inductance

Important! On Panel control mode, press F1 to choose one of the above parameters, and value of the parameter can be adjusted by the knob (1).

If Remote control mode, press F1 to choose one of the above parameters, and value of the parameter can be adjusted by the current potentiometer knob on analog wire feeder.

(4) CALL button

You can copy a job that has already been stored in one program location to any other program location. To copy a job, proceed as described below:

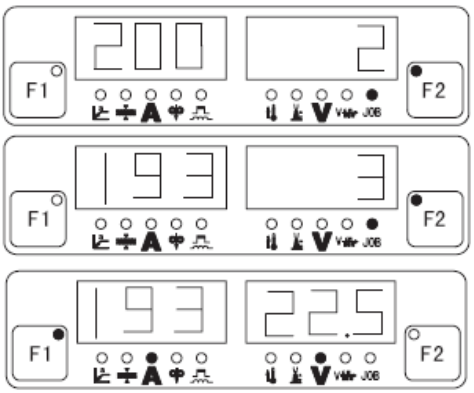

(1) With the "Process" button (4), indicator is on (22)-the last job used is displayed. To view settings programmed in this job, use the "Parameter selection" buttons (2) and (3). The process and operating mode of the stored job are also displayed.

(2) With the adjustment dial (1), select the desired job

(3) With the "Process" button (4), indicator (22) is off. Exit from the retrieving mode.

(5) STORE button

Creating a job

The machine comes with no jobs pre-programmed. A job has to be created before it can be retrieved. To create a job, proceed as follows:

(1) Set the welding parameters that you want to store as a

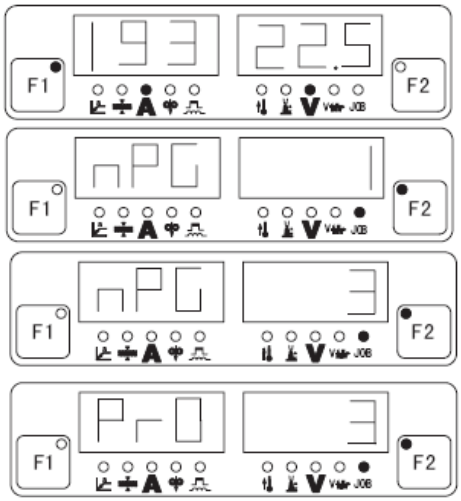

"Job"

(2) Briefly press the Store button (5) to change to the job menu. The first vacant program location for the job is now indicated

(3) Select the program location with the adjustment dial (1), or else leave the suggested program location unchanged.

(4) Press and hold the Store button (5). The left-hand displayer reads "Pro" –the job is stored in the program location you have just selected.

Important! If the selected program location already has a job stored in it, then this existing job will be replaced by the new job.

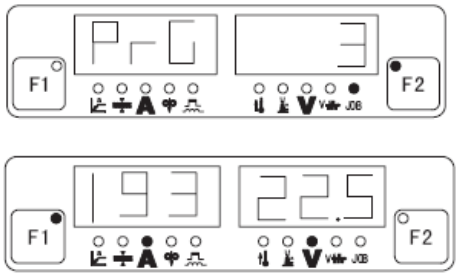

(5) "PrG" appears on the left-hand displayer to indicate that the job is now stored. Release the Store button (5)

(6) Briefly press the Store button (5) to exitfrom the job menu

Job correction

If correct job, please follow the steps:

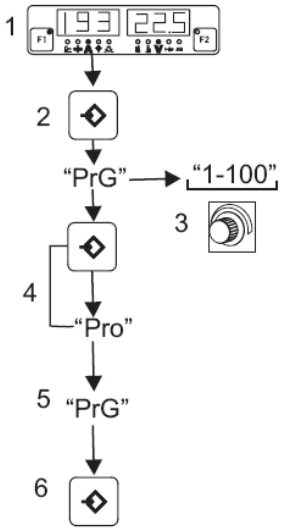

(1) Set the welding parameters that you want to store as a "Job"
(2) Briefly press the Store button (5) to change to the job menu. The first vacant program location for the job is now indicated
(3) Select the program location with the adjustment dial (1), or else leave the suggested program location unchanged.
(4) Press and hold the Store button (5). The left-hand displayer reads "Pro" –the job is stored in the program location you have just selected
(5) "PrG" appears on the left-hand displayer to indicate that the job is now stored. Release the Store button (5). If the selected program location already has a job stored in it, then this existing job will be replaced by the new job
(6) Briefly press the Store button (5) to exit from the job menu

(6) Wire diameter button
For selecting wire diameter.

(7) Wire material selection button(s)
For selecting the filler metal and shielding gas type. OP is used for upgrade.

(8) Torch operation modes button(s)

For selecting the operating mode of the torch.

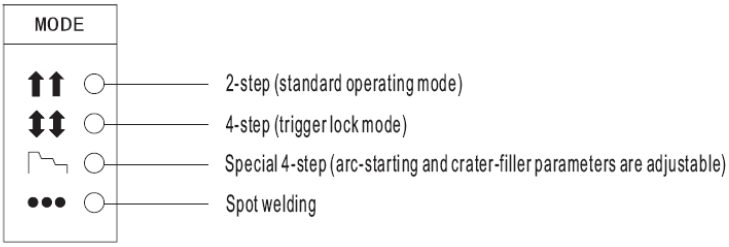

(9) Process button (s)

For select welding process.

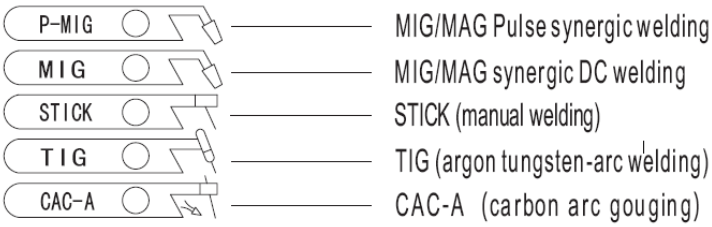

(10) F2 selection button indicator

When the indicator lights up, F2 works

(11) "JOB" No.

For receiving parameter records/job numbers that were previously saved with "Store" button.

(12) Welding speed indicator

When the light is on, the right-hand displayer shows the preset welding speed (cm/min) , and the wire speed and welding current & voltage are calculated as a function of the "a"-dimension parameter (20)

(13) Welding voltage indicator

When the indicator lights up, the right-hand displayer shows the preset or actual welding voltage.

Important! Power source open circuit voltage is variable. In STICK mode, open circuit voltage displayed is about 23V before welding; after starting arc, it increases as the real situation, and may be up to 79V, so as to get ideal arcing characteristic.

(14) Arc-length correction parameter

For correcting the arc length (-5.0-+5.0) by adjustment knob (1) when indicator is on, the right-hand displayer shows the arc length value when the indicator lights up.

- \- shorter arc length
- 0 neutral arc length
- \+ longer arc length

Important! The range (-5.0-+5.0) means that, when preset welding current, the arc length value is -50％～+50％ of the corresponding welding voltage.

(15) Temperature Indicator

This is reserved function, cannot operate right now.

(16) Peak current/Inductance parameter

For adjusting the peak current during the P-MIG/MAG welding process, values range (-5.0-+5.0)

- \- shorter arc length
- 0 neutral arc length
- \+ longer arc length

For synergic MIG, the inductance value when changing short circuiting transfer (-5.0-+5.0).

- harder, stable arc
0 neutral arc
+ soft, low spatter arc

In electrode (MMA) welding mode, for influencing the short-circuiting amperage at the instant of droplet transfer

0 soft, low-spatter arc
100 harder, more stable arc

(17) Wire feeding speed indicator

When the indicator is on, the left-hand displayer shows the wire feeding speed (M/min), when adjust this button, the relevant parameters will change automatically

(18) Welding current indicator

When the indicator is on, the left-hand displayer shows the preset or real welding current values

(19) Sheet thickness indicator

When the indicator is on, the left-hand displayer shows the preset sheet thickness (mm). The relevant parameters will change automatically when this value is changed.

(20) "a" dimension indicator

When the indictor is on, the left-hand displayer shows "a" dimension (mm). Wire speed and welding current & voltage are calculated as a function of the "a"-dimension parameter

(21) F1 selection button indicator

When the indicator lights up, F1 button works.

(22) CALL program mode indicator

When the indictor is on, power source is in call program mode.

(23) Sub-menu parameters regulation indicator

This indictor is on when in sub-menu parameters adjustment.

4-4 Interface

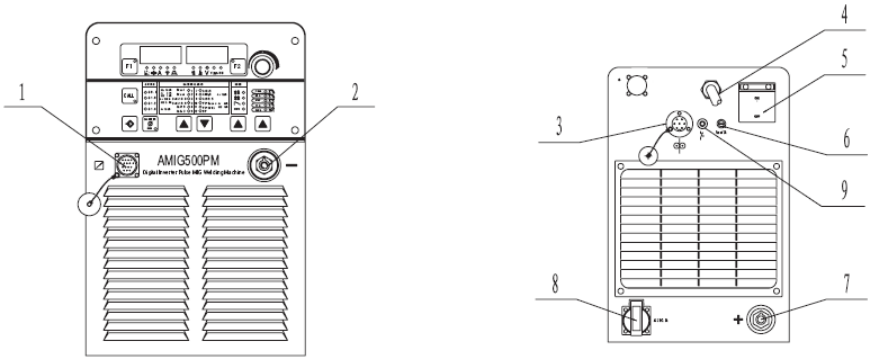

Fig. 4-4-1: Connections

1. Twin wire communication control socket X3

Use on twin wire function. When use, connect two control sockets of two welding machines by communication cable.

2. Output socket (-)

- Connect ground cable in P-MIG/MAG welding process
- Connect the torch cable in TIG welding
- Connect ground cable or electrode holder in MMA welding
- Connect ground cable in gouging

3. Wire feeder control socket X7

For connecting with the control cable of wire feeder, please refer to “Table 4-4-1” in detail:

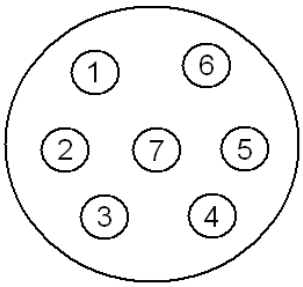

NO.	Description
1	AC31V
2	
3	RS485 communication interface
4	
5	
6	
7	Welding arc voltage feedback

Table 4-4-1: Wire feeder control socket X7

4. Power input cable

5. Circuit breaker

The function of circuit breaker is to protect welding machine and operator by automatic trip to turn-off power supply when overload or short circuit happens to the power source. Normally, the switch flipped to upward means power-on. To start or stop the welding machine is done by the mains switch in the distribution box. Please do not take this circuit breaker as the power switch.

6. Fuse (2A)

7. Output socket (+)

- Connect wire feeder welding cable in MIG/MAG welding process
- Connect ground cable in TIG welding
- Connect ground cable or electrode holder in MMA welding
- Connect arc air gouging gun in gouging

8. Power supply for gas heater X5

For connecting the heater coil of the gas regulator

Note! Please choose the gas regulator with the same voltage degree of output socket.

9. Resettable overload protector

4-5Wire feeder

This wire feeder adopts raster feedback and is a fully digital control close-type machine. It has two control panels: digital type and analog type.

● Connector and control panel of analog wire feeder

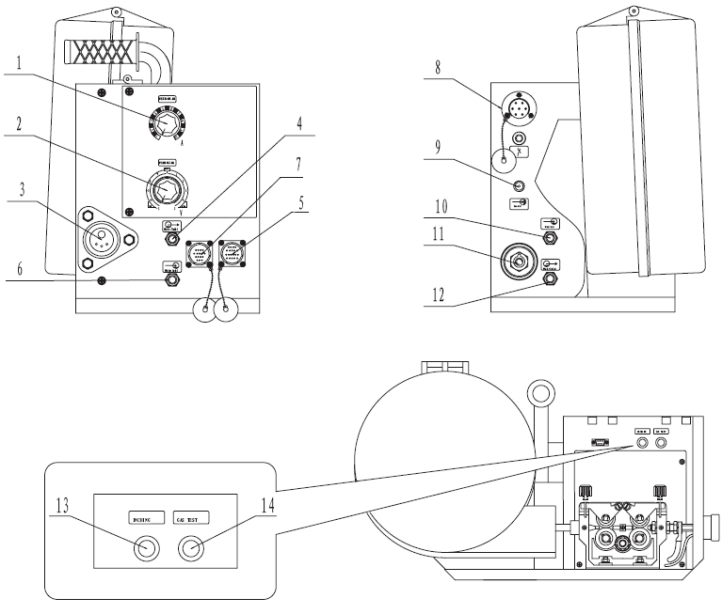

Fig. 4-5-1: Connector and control panel of analog wire feeder

1. Current regulation button

For preset welding current on analog adjustment mode (set sub-menu parameter P09 as OFF).

2. Voltage regulation button

For preset welding voltage on analog adjustment mode (set sub-menu parameter P09 as OFF).

3. Torch connector

For air-cooled or water-cooled European type.

4. Water outlet

For connecting water inlet of water cooled torch (blue).

5. Digital communication sockets

For automation or remote controller connection. Connection information please refer to “Table 4-5-1”.

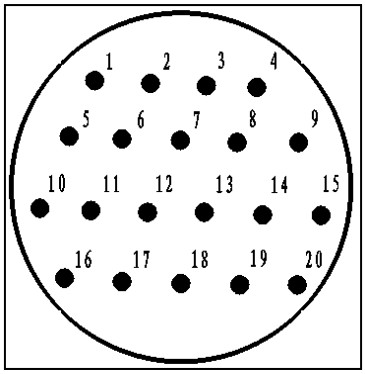

NO.	Description
1~4	485 serial communications
5	Voltage preset signal
6	Current preset signal
7	Manual wire feed switching signal
8	Gas test switching signal
9	Start and stop switching signal
10	+15V
11	GND
12, 13	Current with/without contact signal
14, 15	External urgent stop signal

	19, 20	AC current 31V

Table 4-5-1: Digital communication socket

6. Water inlet

For connecting water outlet of water cooled torch (red).

7. Control cable connector of digital welding torch (KC3)

For connecting the control plug of digital torch, please refer to Table 4-5-2 in detail.

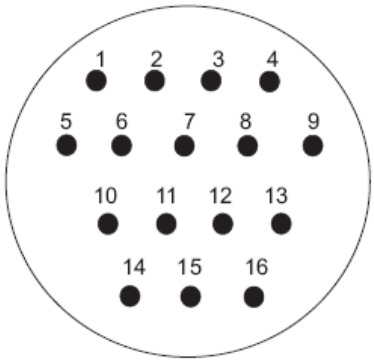

NO.	Description
1	Welding torch switching signal
2	Welding torch right-hand button signal
3	Welding torch bottom button signal
4	Welding torch left-hand button signal
5	Welding torch upper button signal
6	GND
7	Digital welding torch selection signal
8	Electrical machine negative pole of spool torch
9	Electrical machine positive pole of spool torch
10-16	Null

Table 4-5-2: Control cable connector of digital welding torch (KC3)

8. Control socket of wire feeder

For connecting the power source through the control cable. Connection information please refer to “Table 4-4-1”.

9. Gas inlet

For connecting with the gas cylinder via gas hose.

10. Water inlet

For connecting with blue water connector of water cooler.

11. Welding cable socket

For connecting with the output terminal (+) of power source via welding cable.

12. Water outlet

For connecting with red water connector of water cooler.

13. Wire INCHING button

Press the button to launch the manual wire feeding, wire feed motor works and start feeding wire. Turn current adjustment knob to adjust the wire feed speed. Release the button and manual wire feeding will stop.

14. Gas test button

Click the gas test button will start the gas valve, but the wire feeder and welding machine will not work. The gas test will last for 30 seconds, and re-click the gas test button will stop gas flow ahead of time.

● Connector and control panel of digital wire feeder

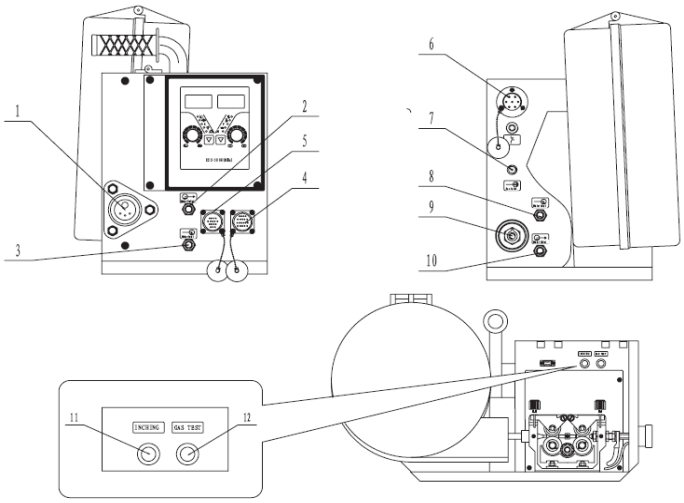

Fig. 4-5-2: Connector and control panel of digital wire feeder

1. Torch connector

For connecting with welding torch of European connection.

2. Water outlet

For connecting water flow out tube of torch (red).

3. Water inlet

For connecting water flow in tube of torch (blue).

4. Peripheral control socket (KC2)

For connecting the auxiliary equipment of system, please refer to Table 4-5-1 in detail.

5. Control cable connector of digital welding torch (KC3)

For connecting with the control plug of digital torch, please refer to Table 4-5-2 in detail.

6. Control socket of wire feeder

For connecting the power source, please refer to Table 4-4-1 in detail.

7. Gas inlet

For connecting with the gas cylinder.

8. Water inlet

For connecting the outlet of water cooler.

9. Welding cable socket

For connecting with the output terminal (+) of power source via welding cable.

10. Water outlet

For connecting the water return inlet of water cooler.

11. Wire INCHING button

Press the button to launch the manual wire feeding, wire feed motor works and start feeding wire. Turn current adjustment knob to adjust the wire feed speed. Release the button and manual wire feeding will stop.

12. Gas test button

Click the gas test button will open the gas valve, the wire feeder and welding machine will not work. The gas test will last for 30 seconds, and re-click the gas test button will stop gas flow ahead of time.

● Control panel of digital wire feeder

The control panel of the digital wire feeder can display the preset parameters and actual welding current and voltage. It is easy to check and adjust the welding process by the operators and especially suitable for the welding process with long welding cables.

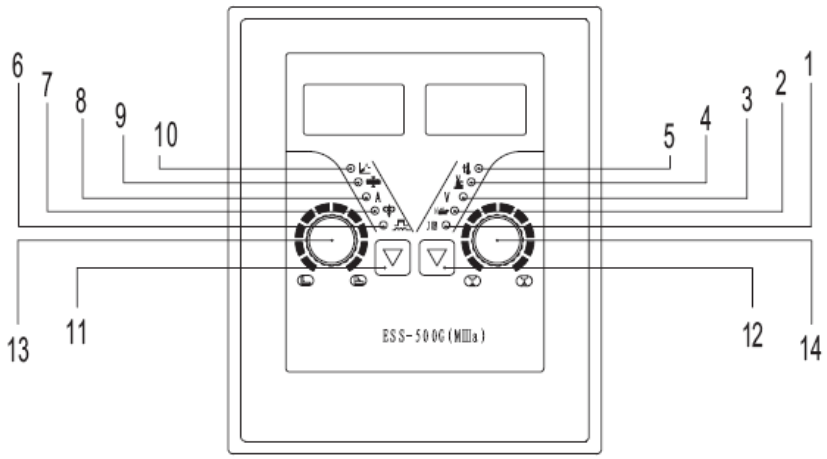

Fig. 4-5-3: Control panel of digital wire feeder

1. JOB No. indicator

For retrieving parameter records/job numbers that were previously saved with the “Store” button.

2. Welding speed indicator

When the light is on, the preset welding speed (cm/min) is on the right-hand displayer.

3. Welding voltage indicator

When the light is on, the preset or actual welding voltage is on the right-hand displayer.

4. Arc-length correction indicators

For correcting the arc length, when the light is on, the right-hand displayer shows the arc length value.

- shorter arc length
0 neutral arc length
+ longer arc length

5. Inner temperature indicators

This is reserved function, cannot operate right now.

6. Peak current/ Inductance

For adjusting the peak current during the P-MIG/MAG welding process, values range (-5.0-+5.0).

- shorter arc length
0 neutral arc length
+ longer arc length

For synergic MIG, change the inductance when short circuiting transfer (-5.0-+5.0).

- harder, stable arc

0 neutral arc
+ soft, low spatter arc

7. Wire feeding speed indicator
When the indicator lights up, the left-hand displayer shows the wire feeding speed (M/min).

8. Welding current indicator
When the indicator lights up, the left-hand displayer shows the preset or actual welding current values.

9. Sheet thickness indicator
When the indicator lights up, the left-hand displayer shows the preset sheet thickness.

10. "a" dimension indicator
When the indicator lights up, the left-hand displayer shows "a" dimension.

11. Parameters selection button 1
Select parameters from following for adjustment:

- "a" dimension
- Sheet thickness
- Welding current
- Wire feeding speed
- Peak current/Inductance

12.Parameters selection button 2
Select parameters from following for adjustment:

- Temperature indicator for the mains
- Arc length adjustment
- Welding voltage
- Welding speed
- Job (Channel) No

13.Parameter adjustment knob 1
Adjust values of "a" dimension, sheet thickness, preset current peak current and inductance.

14.Parameter adjustment knob 2
Adjust values of preset voltage, Job No.

4-6 Water cooling system

The cooling unit is powered by the power source. As soon as the mains switch of the power source is switched on, the cooling unit will be ready to use.

Cooling unit connections please refer to Fig. 4-6-1.

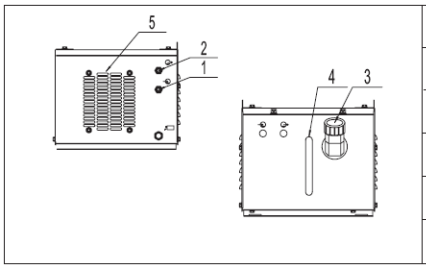

NO	Description
1	Water inlet (red)
2	Water outlet (blue)
3	Water injection
4	Water marks
5	Fan

Fig. 4-6-1: Cooling unit connections

Note! Please check the volume and purity of the coolant before using. Please take freeze-proofing measures when the temperature is too low.

Important! Factory setting of welding machine is water cooled mode (sub-menu parameter P10 is ON). When short water, error code E0A displays, welding machine stops working. When your machine is gas cooled, please set P10 as OFF.

4-7 Installation

Warning! An electric shock can be fatal. If the machine is plugged into the mains electricity supply during installation, there is high risk of very serious injury and damage. Do not use the functions described here until you have read and completely understood "safety rules" in the beginning. Only carry out work on the machine when

- the mains switch is on turn-off position,
- the machine is unplugged from the mains.

● **Installation of the system components**

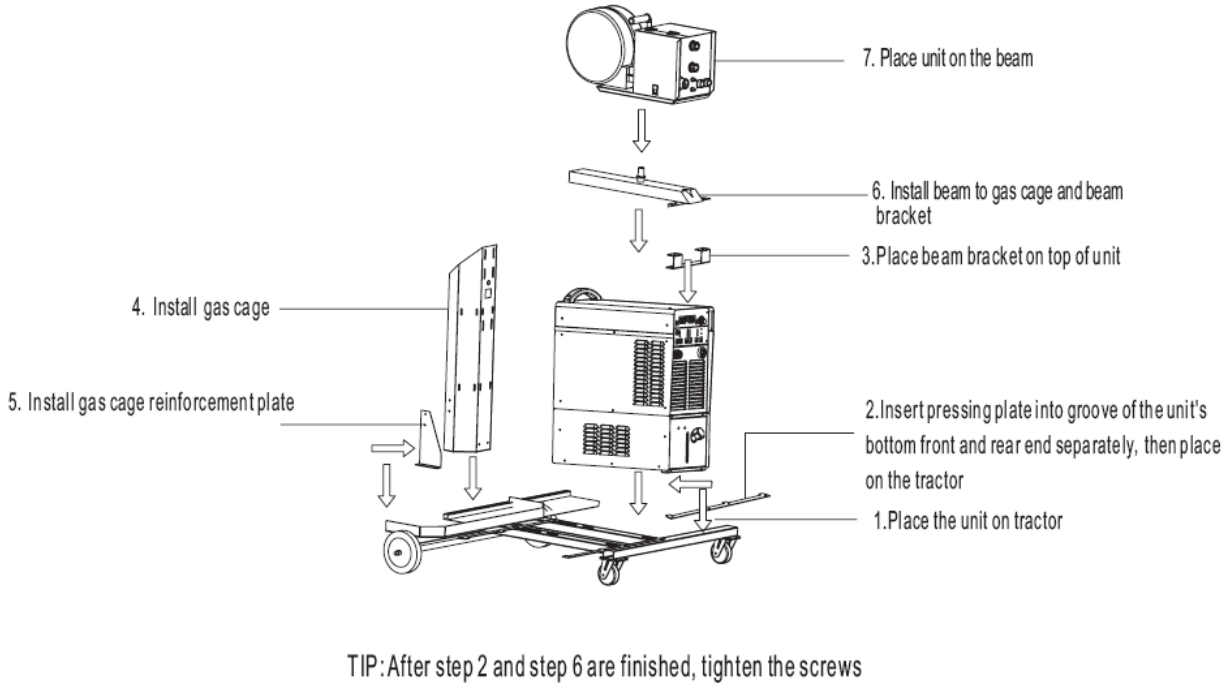

Fig. 4-7-1: Installation of the system components

● **Input power supply cable installation**

Please note the size of fuse and circuit breaker in the table below are for reference only.

Single voltage

Model		AMIG500P
Input power supply		Three phase, AC380V/400V/415V
Electricity grid min. power (KVA)	Power grid	38
	Generator	50
Input protection(A)	Fuse	50
	Circuit breaker	63
Cable size (mm²)	Input cable	≥4
	Output cable	70
	Protective GND wire	≥4

Table 4-7-1: Input power supply cable requirement - Single voltage

Multi-voltage

Model		AMIG500P
Input power supply		Three phase, AC220/440V, 60Hz
Electricity grid min. power (KVA)		38
Input protect(A)	Fuse	50
	Circuit breaker	63
Cable size (mm²)	Input cable	≥4
	Output cable	70
	Protective GND wire	≥4

Table 4-7-2: Input power supply cable requirement- Multi voltage

Note! Welding machine must be taken special design if it is powered by generator, please contact with manufacturer if you have such needs.

Please refer to Fig. 4-7-2 for connections of input cable and distribution box:

Warning! ---Avoid hot-line work
--- Operating by professional electrician
--- Avoid connecting two power sources to one breaker
--- Please refer to Table 4-7-1~Table 4-7-2 to check if standard of input voltage, breaker and input cable is suitable

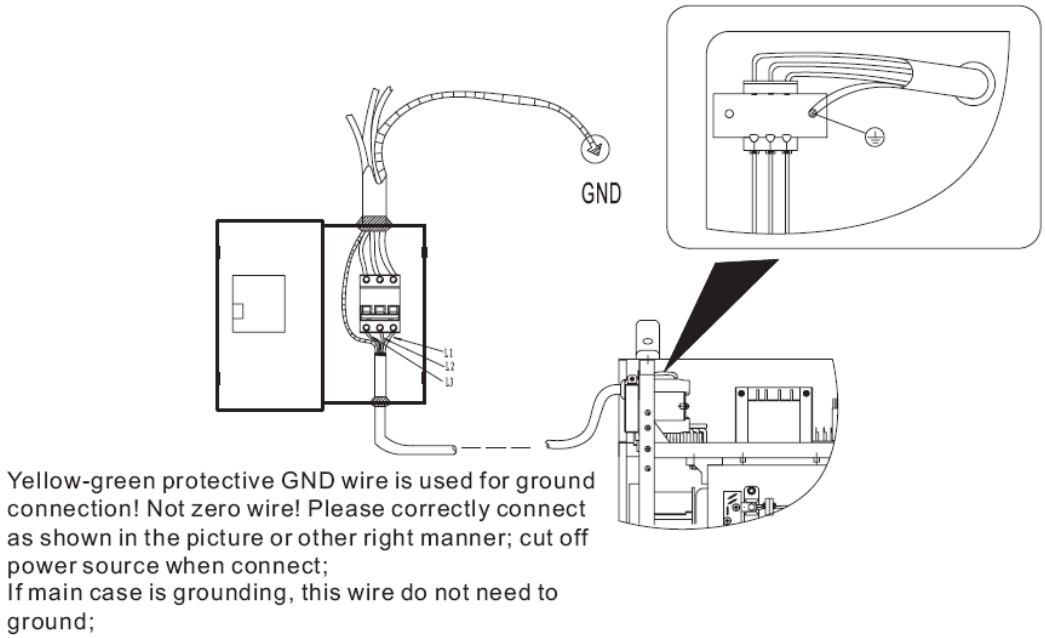

Fig. 4-7-2: Connections for input cable and distribution box

● **Welding cable components assembly**

Assembly method of welding cable components please refer to Fig. 4-7-3:

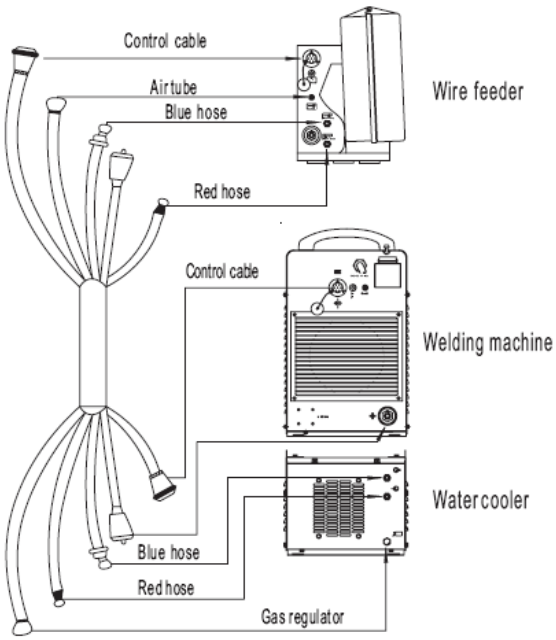

Fig. 4-7-3: Welding cable components assembly

● **Gas cylinder installation**

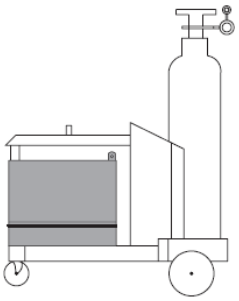

Fig. 4-7-4: Gas cylinder installation

1. Stand the gas cylinder on the trolley and secure it by fixing the cylinder strap around a point in the top third of the cylinder-but never around the neck of the cylinder.
2. Take the protective cap off the gas cylinder.
3. Gently turn the gas-cylinder value anticlockwise, and blow off any dust and dirt.
4. Screw the pressure regulator onto the gas cylinder and tighten it.
5. Connect the shielding-gas connector to the pressure regulator.

● **Making an earth connection**

(1) Plug one end of the ground cable to the output socket (-) of power source and turn it to fasten it;
(2) Connect the other end of the ground cable to the work piece.

● **Mounting the welding torch**

Welding torch adaptive to this series welding machine includes normal torch and digital torch, and every kind has air cooled and water cooled for choice. Choose wire feeding tubes according to wires of different diameters and materials.

- Steel wire hose is suitable for hard wire, such as carbon steel wire, stainless steel wire.
- Teflon wire hose is suitable for soft wire, such as Aluminum and Aluminum alloys, also for copper and copper alloy wire.

Installation guide for Teflon wire hose as Fig. 4-7-5:

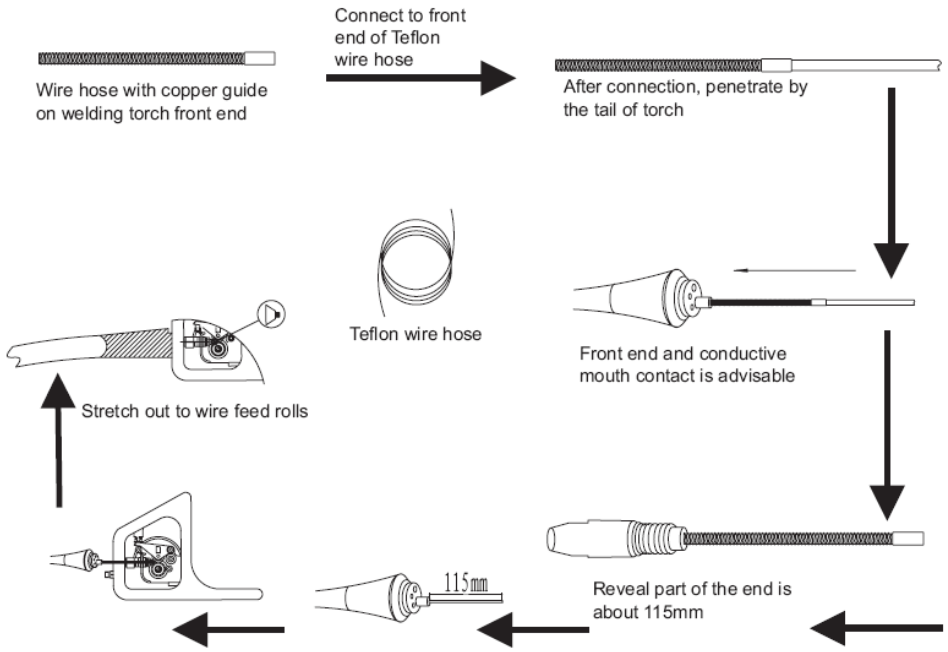

Fig. 4-7-5: Installation guide for Teflon wire hose

For installation of steel wire feed hose, please refer to Fig. 4-7-6

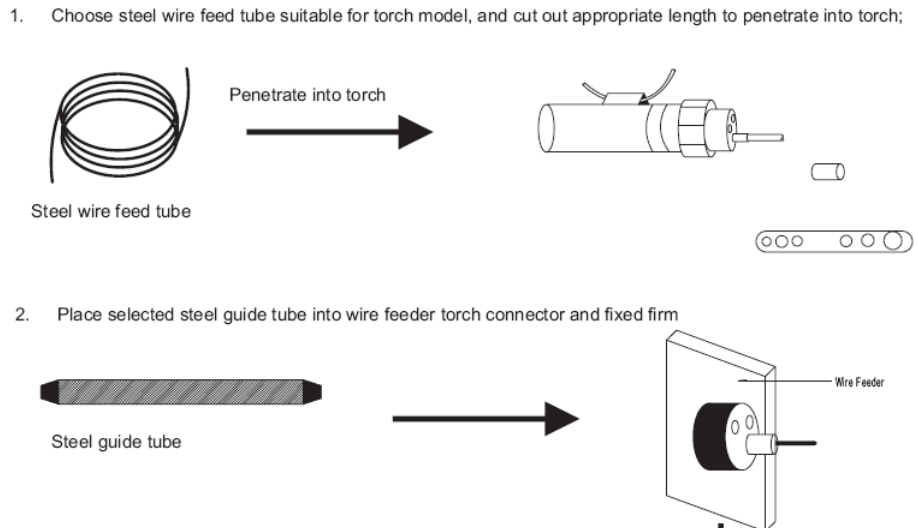

Fig. 4-7-6: Installation for steel wire feed tube

Note! If the wire hose is too tight or too loose, it will increase resistance for wire feeding and cause wire feeding instable.

●Normal welding torch assembly

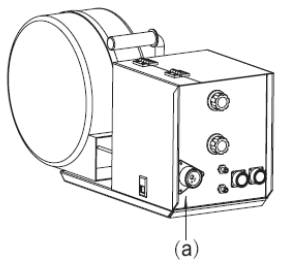

Fig. 4-7-7: Analog panel wire feeder

1. Switch off the power source;
2. Check whether the torch is correctly and completely tooled up. If yes, firstly install the wire feed hose, then plug the torch's connector into torch connector (a) of the wire feeder;
3. Screw up to make the torch be well in place;
4. If use water-cooled torch, plug the water-inlet and water-outlet of the torch into the relevant inlet and outlet of wire feeder.

● Digital welding torch assembly

The job mode, arc length and adjustment of current are selectable on digital torch. The digital welding torch is only used with digital wire feeder.

Descriptions of digital welding torch

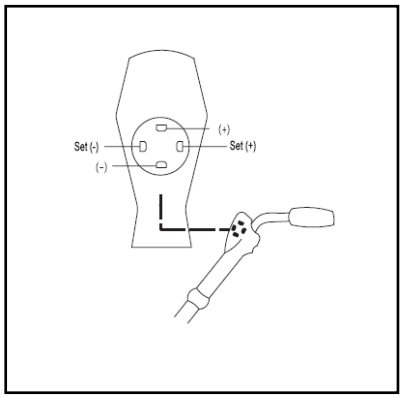

Fig. 4-7-8: Digital welding torch

Four keys on digital welding torch, below are the functions of torch keys:

- Press "SET+" & "SET-" together will enter or exit from JOB mode,
- In JOB mode, please choose the Channel No. by press "+" "-".

If not job mode, the 4 keys function is:

- "SET-"button

Press "SET-", data of "Arc Length" present on the right side of wire feeder displayer will reduce.

- "SET+"button

Press "SET+", data of "Arc Length" present on the right side of wire feeder displayer will increase.

- "+"button

-Press "+", data of "welding current" present on the left side of wire feeder displayer will increase.

- "-"button

Press "-", data of "welding current" present on the left side of wire feeder will reduce.

Installation

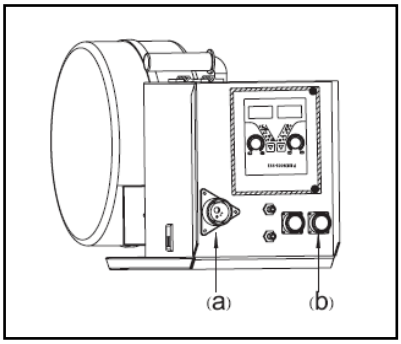

1. Switch off the power source
2. Check whether the torch is correctly and completely tooled up. If yes, firstly install wire feed hose, then plug the torch's connector into the torch connector (a) of the wire feeder;
3. Screw up to make the torch well in place;
4. Plug the control plug of the welding torch into the torch control connector (b);
5. If use water-cooled torch, plug the water-inlet and water-outlet of the torch into the relevant inlet and outlet of wire feeder.

Fig. 4-7-9: Wire feeder

Important! The water-inlet and water-outlet of the torch must match with the relevant inlet and outlet of the wire feeder.

● Installation of wire feed rollers

The proper wire feed rolls must be chosen according to the size and material of the wire. Types of wire feed rollers as Fig. 4-7-10:

Type 1: for hard wire, such as carbon steel wire, stainless steel wire.
Type 2: for soft wire, such as Aluminum and Aluminum alloys, also for copper and copper alloy wire.
Type 3: for flux-cored wire

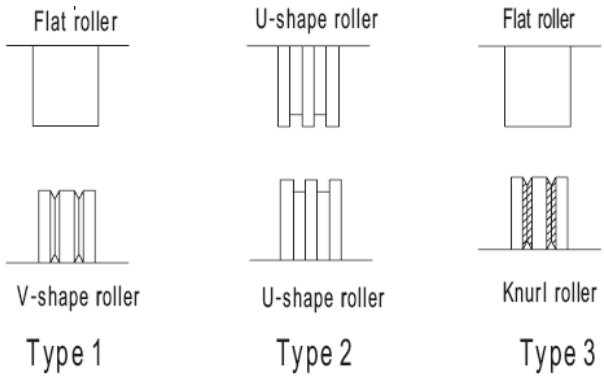

Fig. 4-7-10: Wire feed rollers

Important! When use pressure device to adjust wire feed roll pressure, too much pressure will cause wire crushed, and the wire coating be damaged, and it will cause the wearing out of feed rollers and increase the wire feeding resistance. Suitable pressures for wires of different materials and diameters are as shown in Fig. 4-7-11.

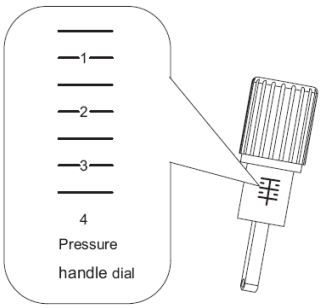

Type \ Pressure Value \ Diameter	ϕ0.8	ϕ1.0	ϕ1.2	ϕ1.6
V-shape roller	1.5~2.5	1.5~2.5	1.5~2.5	1.5~2.5
U-shape roller	0.5~1.5	0.5~1.5	0.5~1.5	0.5~1.5
Knurl roller	——	——	1.0~2.0	1.0~2.0

Fig. 4-7-11: Wire feed rollers installation parameter

In order to get ideal wire feeding result, the proper wire feed rolls must be chosen according to the size and material of the wire. Specific step as follows:

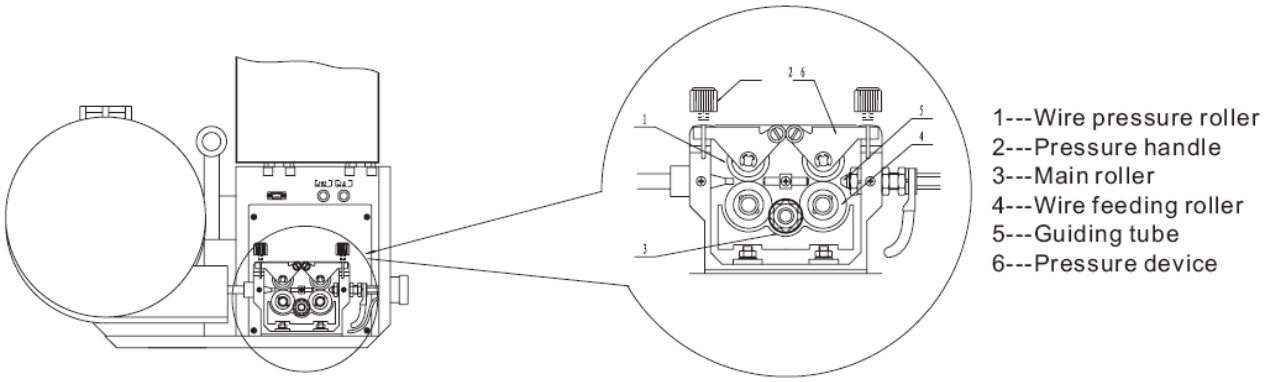

Fig. 4-7-12: Wire feeder structure

1. Switch off the power source;
2. Open the side plate;
3. Press the pressure device downward;
4. Pull up the pressure device;
5. Remove the fixed wire pressure roller or wire feeding roller by the screw driver;
6. Replaced by the proper wire pressure roller or wire feeding roller;
7. Fix the wire pressure roller or wire feeding roller by the screw driver;

Important! Regulating the pressure of feeding rollers with the pressure handle, ensure the wire go through the guiding tube smoothly, and there should be a bit brake force where the wire come out from the conductive tip to avoid the wire feed rollers skidding.

Important! There is a scale for wire feeding pressure on the Pressing Handle (Fig. 4-7-11), different materials and sizes of the wires are corresponding to different pressures value. Actual pressure adjustment standard is according to torch cable length, torch type, wire feed condition and wire type.

Note! Too much pressure will cause wire crushed, and the wire coating will be damaged, and it will cause the wearing out of feed rollers and increase the wire feeding resistance.

● **Installation of wire spool**

Warning! The spooling wire may cause danger. During the installation, hold on the wire end to prevent wire damage after bounce.

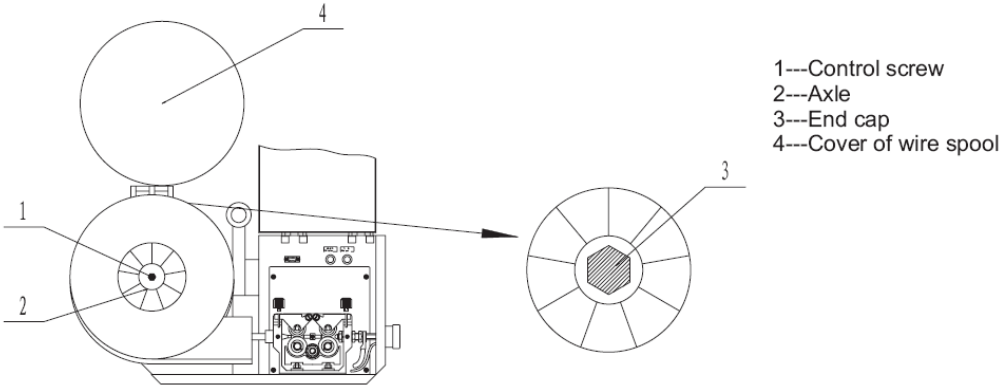

Fig. 4-7-13: Wire spool

1. Switch off the power source;
2. Open the cover of wire spool;

3. Screw the end-cover of the shaft;
4. Fix the wire spool into the shaft and make sure of the correct direction;
5. Twist the end-cover of the shaft

Warning! The drop of wire spool will cause danger! Ensure the wire spool is fixed in the bracket firmly.

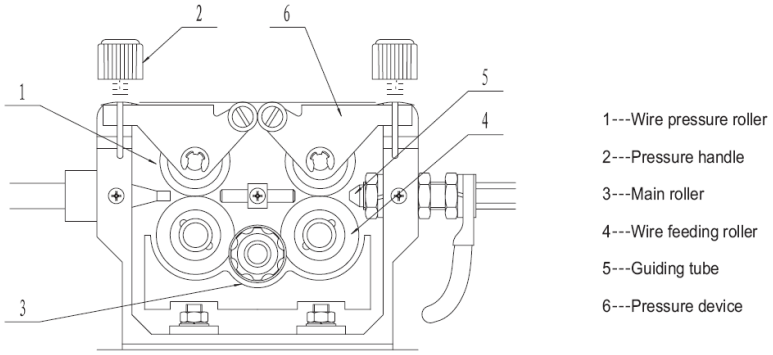

Fig. 4-7-14: Wire feeding device structure

6. Open side cover of wire feeder
7. Pull pressure handle forward
8. Pull up the pressure device
9. Take the end of wire, cut off the curve part
10. Straighten the front 15cm part of wire
11. Insert the wire into wire tube, and also into the tube of torch about 5cm;
12. Press the pressure device downward
13. Push the pressure handle back to vertical;
14. Adjust the pressure force
15. Straighten the welding torch and detach the nozzle and tip;
16. Plug into the power supply
17. Switch on the power source;
18. Press the wire INCHING button and hold until the wire comes out from the torch; adjust appropriate brake force by adjusting control screw (1)

Note! Use screw wrench to turn the Brake Force Control Screw (1) to adjust braking force. The brake force must be appropriate, ensure the wire round the wire spool will not become too loose and prevent the wire scattering. If the brake force is too strong, it will increase the wire-feeding load.

Warning! The quick coming out of the wire from the torch is dangerous! Please hold the torch to prevent it towards people's face or body.

19. Release the wire INCHING button;
20. Switch off the power source;
21. Screw up the contact tip, and put the nozzle back;
22. Close the cover of wire spool

4-8 MIG/P-MIG welding process and operating

Warning! Operating the equipment incorrectly can cause serious injury and damage. This part is about operating. Do not use the functions until you have read and completely understood content of this

manual.

- **Sub-menu parameter**

In order to achieve an optimum welding result, it is necessary in some cases to make corrections of the arc-length, arc force as well as parameters like pre-gas time, post-gas time and slow wire feeding. For details of how to set the Sub-menu parameters, please refer to “Sub-menu parameter set”. Specific sub-menu parameters as Table 4-8-1:

Item	Parameters	Setting Range	Min. Value	Factory Setting
P01	Burn back time	0.01～2.00s	0.01s	0.08s
P02	Slow wire feeding	1.0～22.0M/min	0.1 M/min	3.0 M/min
P03	Gas pre-flow time	0.1～10.0s	0.1s	0.20s
P04	Gas post-flow time	0.1～ON	0.1s	1.0s
P05	Initial period	1～200％	1％	135％
P06	Crater filler period	1～200％	1％	50％
P07	Transitional period	0.1～10.0s	0.1s	1.0s
P08	Spot welding time	0.01～9.99s	0.01s	2.0s
P09	Digital/Analog signal selection	OFF/ON	——	OFF
P10	Water cooling selection	OFF/ON	——	ON
P11	Double pulse frequency	0.5～5.0Hz	0.1Hz	OFF
P12	High pulse group arc length adjustment	-50～+50	1	20
P13	Double pulse speed offset	0～2m	0.1m	2m
P14	High pulse group duty cycle	10～90%	1%	50%
P15	Pulse mode	OFF/UI/II/UU	——	OFF
P16	Fan-on demand cooling time	5～15min	5min	15min
P17	Special 2-step arc start time	0～10s	0.1s	OFF
P18	Special 2-step arc stop time	0～10s	0.1s	OFF
P19	Separate adjustment mode	OFF/ON	——	OFF
P20	Twin wire phase position	0-100%	1%	0
P21	Twin wire master-slave control	ON/ONL/ONT/OFF	——	ON

Table 4-8-1: Sub-menu parameter

Note! P11-P14 is available on double pulse function; P20-P21 is available on twin wire welding mode.

- **P01 Burn back time**

If too long time, the wire will burn back too much with too large melting ball at the end of wire; if too short time, the wire will stick with the work piece.

- **P02 Slow wire feeding**

With too quick feeding speed, the wire will be easily exploding with failed arc-starting; if the feeding speed is slower than the melting speed, the long arc will cause conductive tip burned.

- **P03 Gas pre-flow time**

Longer time will cause waste of gas and low efficiency; shorter time will cause air hole during arc-starting.

- **P04 Gas post-flow time**

Longer time will cause waste of gas; shorter time will cause air hole during crater filler period.

- **P05 Initial period**

Special 4-step mode and set the percentage between initial period and pre-set parameters. When adjust the initial period, press F2 and then adjust dial (1), make correction of the arc length of the initial period. Press F2 again to exit.

- **P06 Crater filler period**

4-sept or special 4-step mode, set the percentage between crater filler period and pre-set parameters. When adjust the crater filler, press F2 and then adjust dial (1), make correction of arc length of the crater filler. Press F2 again to exit.

- **P07 Transition period**

During the special 4-step mode, the time cost from starting current to normal welding current and then to post current.

- **P08 Spot welding time**

Choose spot welding process and set the welding time.

- **P09 Digital/Analog signal selection**

In ON mode, welding parameters can be adjusted by welding machine control panel, digital wire feeder control panel, digital welding torch and digital remote controller; in OFF mode, welding parameters can be adjusted by analog wire feeder.

- **P10 Water cooling selection**

In OFF mode, without water cooler or the water cooler do not work, no water cooling protection; In ON mode, the water cooler works, and has water cooling protection if in wrong situation.

- **P11 Double pulse frequency**

The double pulse welding is added modulated by low frequency pulse and the low frequency pulse between 0.5-5.0 Hz. Compared with single pulse, double pulse has more advantages: no need to swing, welding seam become fish-scaly automatically, the depth and density of the fish-scale welding seam is adjustable; precise control of heat input. In low-current, cool the melting pool, reduce the deformation of the work piece and the hot cracking tendency. The melting pool can be periodically stirred; grain refinement, hydrogen and other gases are easily precipitated from the pool to reduce the porosity and the welding defects.

Double pulse reference wave form as shown in Fig. 4-8-1.

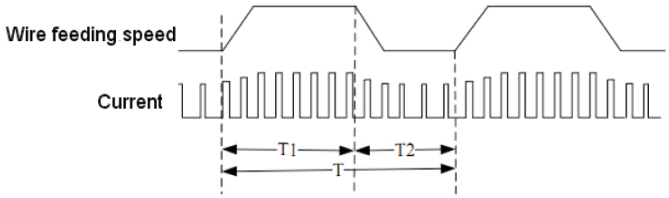

Fig. 4-8-1: Double pulse reference wave form

Choose OFF mode, there is no double pulse, but single pulse mode. If ON, it is double pulse mode, at the same time, you can set low frequency pulse rate. The density and depth of ripple pattern in welding seam can be changed by adjusting low frequency pulse frequency, which is similar to adjustment of T value in Fig. 4-8-1.

- **P12 High pulse group arc length adjustment**

In double pulse mode, set high pulse group arc length adjustment to adjust the width of ripple pattern welding seam.

Important! The base arc-length correction with low frequency pulse is controlled by the voltage adjustment knob in the control panel of wire feeder.

- **P13 Double pulse speed offset**

Set the wire feeding in double pulse, the changing arrange of wire feeding means adjusting the depth of ripple pattern.

- **P14 High pulse group duty cycle**

Set ratio between the high pulse group time T1 and low frequency period T in double pulse mode, to adjust the ratio of ledge and groove in the whole ripple pattern.

- **P15 Pulse mode**

In OFF mode, non-fixed frequency mode; in UI mode, fixed frequency mode; in II mode, current control mode；in UU mode, voltage control mode.

- **P16 Fan-on demand cooling time**

Set the time that fan continues to work after power source stops welding.

- **P17 Special 2-step arc starting time**

On special 2-step mode, time for start period. When choose at number, it is time for start period, when reach to this time, will turn to welding standard; when choose at OFF, the function closes.

- **P18 Special 2 step arc stopping time**

On special 2-step mode, time for crater filler time. When choose at number, it is time for crater filler, when reach to this time, will turn to stop welding standard; when choose at OFF, the function closes.

- **P19 Separate adjustment mode**

Analog wire feeder: in ON mode, current and voltage can adjust and display separately; in OFF mode, current and voltage is synergic adjusted, that means voltage will automatically match with current if current is changed.
Digital wire feeder: in ON mode, rotate current adjustment knob to adjust current; rotate voltage adjustment knob to adjust arc length, but voltage is not changed; in OFF mode, current and voltage is synergic adjusted.

- **P20 Twin wire phase position**

When use twin wire welding, adjust phase position of two welding machines.

- **P21 Twin wire master-slave control**

When use twin wire welding, ONL means master machine, ONT means slave machine; both ON means non-cooperative control, both OFF means it does not work.

● **Sub-menu parameters set**

Enter and exit from the sub-menu and parameters adjustment as Fig. 4-8-2:

1. Press and hold the store button (5) in standby mode;
2. Press wire diameter selection button (6) simultaneously;
3. Release store button (5) and wire diameter selection button (6), the indicator (23) is on means enter into the sub-menu mode.

Important! The last parameter to be selected is displayed! The first-time enter shows "P01"

4. Press wire diameter selection button (6) to select parameters
5. Press adjustment knob (1) to change parameters

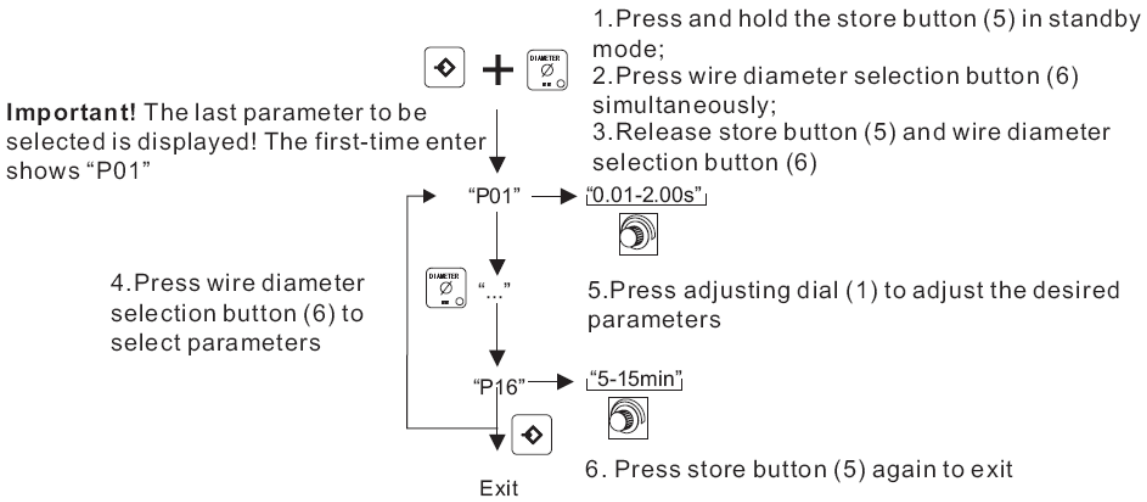

Fig. 4-8-2: Sub-menu parameters set

Important! Adjust the parameters of current percent and arc-length drifting firstly before select the parameters of initial standard (P05) and arc stopping standard (P06). Press F2 to choose the desired one and then changes the parameters by adjusting dial (1).

6. Press storage button (5) again and then exit from the sub-menu mode. The indicator (23) is off meaning the exiting from the sub-menu

● **MIG/P-MIG welding process operating:**

> ⚠ **Warning!** An electric shock can be fatal. If the machine is plugged into the mains electricity supply during installation, there is a high risk of very serious injury and damage. Only carry out work on the machine when
>
> - the mains is switched off
> - the machine is unplugged from the mains

1. Plug the groundcable into current socket (-)and latch it;
2. Connect the other end of the ground cable to the work piece;
3. Plug the torch into the torch connector of the wire feeder;

4. Only where a cooling unit and water-cooled torch are used, plug the water hoses of the welding torch to the correct plug-type connectors on the wire feeder
5. Plug in the mains plug
6. Fix the selected wire;
7. Switch on the power source

> ⚠ **Caution!** Risk of injury and damage from electric shock. When you press the torch trigger, the welding wire is powered up, make sure that the welding wire do not touch people and any conductor or earthed (grounded) parts, such as slings for lifting loads.

> **Note!** Insufficient coolant will cause damage. Check the coolant flow at regular intervals while the machine is in operation-it must be able to see that coolant is flowing properly.

8. Select the needed welding process (press the "Process" button (9), light corresponds to selected welding process is on)
   - MIG/MAG pulse welding
   - MIG/MAG synergic DC welding
9. Select torch's operating mode (press the "Mode" button 8, light corresponds to selected mode is on)
   - 2-step mode
   - 4-step mode
   - Special 4-step mode (arc-starting and arc-stopping parameters are adjustable)
   - Spot welding

Important! Parameters that have been set on one control panel (e.g. wire feeder or remote control unit) might not be able to be changed on the other control panel (e.g. power source).

10. For selecting the filler metal and shielding gas type (press "Material" button (7), light corresponds to selected filler metal and shielding gas is on), as Table 4-8-2.

Filler metal and shielding gas type	Appropriate welding process
CO_2 100% Steel ○	MIG
Ar 82% CO_2 18% Steel ○	MIG，P-MIG
Ar 97.5% CO_2 2.5% CrNi18 8 ○ CrNi19 9 ○	
Ar 100% CuAl9 ○ CuSi3 ○	
○ AlSi5 ○ AlMg5 ○ Al99.5 Ar 100%	
○ OP1 ○ OP2 ○ OP3	

Table 4-8-2: Filler metal and shielding gas type & Appropriate welding process

11. Select the wire diameter (press "Wire diameter" button (6), light corresponds to selected wire diameter is on) Standard of wire diameter can be chosen as follows:
   - Φ0.8
   - Φ1.0
   - Φ1.2
   - Φ1.6

12. Specify the desired welding power with reference to any of the following parameters:
    - a-dimension
    - Sheet thickness
    - Welding current
    - Wire feed speed

Important! The parameters “a”-dimension, sheet thickness, welding current and wire feed speed are directly interlinked. It is only necessary to alter one of the parameters, as the other parameters are immediately adjustable to match.

13. Turn the welding voltage button of the wire feeder into the standard and then do the welding, then adjust the voltage button slightly according to the welding arc length to let the arc in a mixture voice of pulse and short-circuit to achieve perfect welding result.
14. Open the gas cylinder valve
15. Set the gas-flow rate:
    - Press the “Gas-test” button
    - Turn the adjusting-screw on the underside of the pressure regulator until the manometer indicates the desired shielding gas flow-rate
16. Press the torch trigger and start welding

Important! All parameter command values that have been set by means of either the adjustment buttons or the buttons on the torch will remain stored until the next time they are changed. This is true even if the power source is switched off and on again in the meantime.

● **Job mode**

“Job Mode” enhances the quality of welding, both in semi-automatic and fully automated operation. Traditionally, technical parameters of some repeated operations need to be written down for record. In Job Mode, it is now possible to store and retrieve up to 100 different jobs.

The following symbols are used in Job Mode, on the left-hand displayer:

---……..No job in this program location (only when you try to retrieve a job from this location, otherwise nPG)

nPG……No job in this program location

PrG……There is a job in this program location

Pro…….Job is being created /copied in this program location

Creating a job

The machine comes with no jobs pre-programmed. A job has to be created before it can be retrieved. To create a job, proceed as follows:

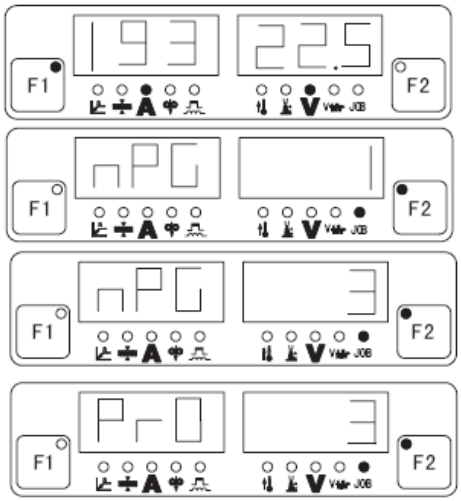

(7) Set the welding parameters that you want to store as a “Job”

(8) Briefly press the Store button (5) to change to the job menu. The first vacant program location for the job is now indicated

(9) Select the program location with the adjustment dial (1), or else leave the suggested program location unchanged.

(10) Press and hold the Store button (5). The left-hand displayer reads “Pro” –the job is stored in the program location you have just selected.

Important! If the selected program location already has a job stored in it, then this existing job will be replaced by the new job.

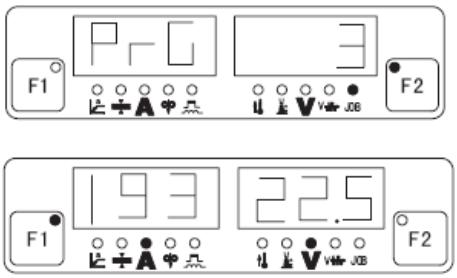

(11) “PrG” appears on the left-hand displayer to indicate that the job is now stored. Release the Store button (5)

(12) Briefly press the Store button (5) to exitfrom the job menu

Retrieving a job

You can copy a job that has already been stored in one program location to any other program location. To copy a job, proceed as described below:

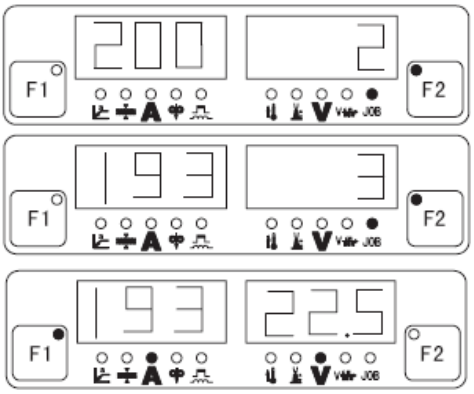

(4) With the “Process” button (4), indicator is on (22)-the last job used is displayed. To view settings programmed in this job, use the “Parameter selection” buttons (2) and (3). The process and operating mode of the stored job are also displayed.

(5) With the adjustment dial (1), select the desired job

(6) With the “Process” button (4), indicator (22) is off. Exit from the retrieving mode.

Job correction

If correct job, please follow the steps: Fig. 4-8-3

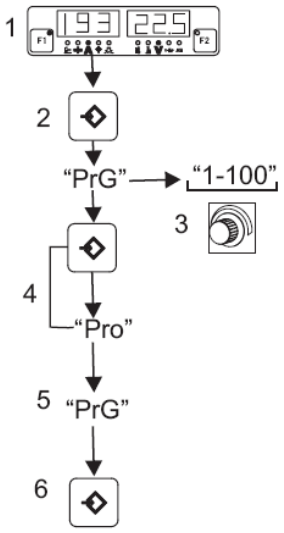

Fig. 4-8-3: Job correction

(7) Set the welding parameters that you want to store as a “Job”

(8) Briefly press the Store button (5) to change to the job menu. The first vacant program location for the job is now indicated

(9) Select the program location with the adjustment dial (1), or else leave the suggested program location unchanged.

(10) Press and hold the Store button (5). The left-hand displayer reads “Pro” –the job is stored in the program location you have just selected

(11) “PrG” appears on the left-hand displayer to indicate that the job is now stored. Release the Store button (5). If the selected program location already has a job stored in it, then this existing job will be replaced by the new job

(12) Briefly press the Store button (5) to exit from the job menu

Restore the factory setting

Press adjustment dial (1) for about 3 seconds, it comes back to factory setting (see Fig. 4-8-4). All indicators on panel light up.

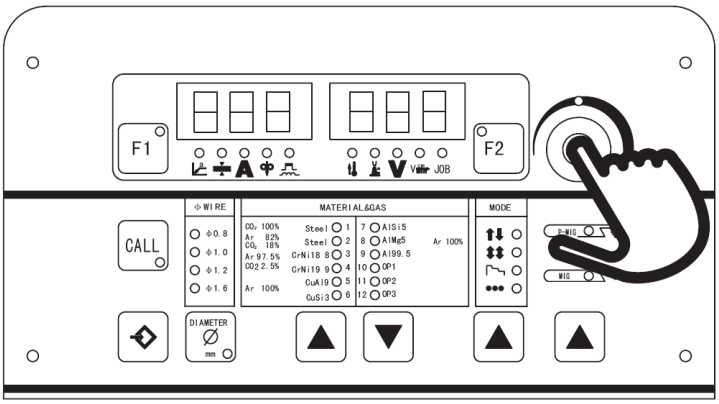

Fig. 4-8-4: Restore the factory setting

4-9 STICK (MMA) welding process and operating

> **Warning!** Operating the equipment incorrectly can cause serious injury and damage. Please read the following chapters before the first starting use the power source:
> - Safety rules
> - before using

> **Warning!** An electric shock can be fatal. If the machine is plugged into the mains electricity supply during installation, there is a high risk of very serious injury and damage. Only carry out work on the machine when
> - the mains is switched off
> - the machine is unplugged from the mains

● Preparation

1. Close all cooling system (please refer to “P10 Water cooling selection” in “Sub-menu parameters)
2. Unplug the machine from mains
3. Switch off the mains switch
4. Dismount the MIG/MAG welding torch
5. Plug the ground cable into either output socket (+) or (-), depending upon which type of electrode is to be used, and latch it in firmly
6. Connect the other end of the ground cable to the work piece
7. Plug the electrode holder into either socket (+) or (-), depending upon which type of electrode is used, and latch it by turning it clockwise
8. Plug in the mains plug

● STICK (MMA) welding

> **Caution!** Electric shock is very dangerous! As soon as the mains switch is on, the electrode is power on. Make sure that the electrode does not touch any person or conductor or earthed parts.

1. Switch on the power source
2. With the “Process” button (9), select the electrode (MMA) welding process

Important! Parameters that have been set on one control panel (e.g. wire feeder or remote control unit) might not be able to be changed on the other control panel (e.g. power source)

For close control mode, please refer to P09 Digital/Analog signal selection in “Sub-menu parameters set” in

detail.

3. Press the “Parameter selection” button (3) and select “Welding current” (18), (indicator on this button must light up)
4. Set the desired amperage, using the adjustment dial (1) (value can be read from the left-hand indicator)
5. Press the “Parameter selection” button (3) to set the “Arc force” (16), (indicator on the button must light up)
6. Set the desired arc-force dynamic, using the adjustment dial (1) (value can be read from the light-hand indicator)
7. Start welding

For panel control mode, please refer to P09 Digital/Analog signal selection in “Sub-menu parameters set” in detail:

3. Select the welding current by “Current dial” on the wire feeder or (press the “Parameter selection” button (3) and select “Welding current” (18), (value can be read from the left-hand displayer)
4. Select the arc force parameter by “Voltage dial” on the wire feeder or (press the “Parameter selection” button (3) to set the “Arc force” (16), (value can be read from the left-hand displayer)
5. Start welding

Important! All parameter command values that have been set will remain stored unit the next time they are changed. This is true even if the power source is switched off and on again in the meantime.

● Sub-menu parameters

In order to obtain optimum welding results, it is necessary to set or adjust parameters like the Hot-Start current, please refer to Table 4-9-1 for detailed sub-menu parameters

Item	Parameter	Range	Min. value	Factory setting
H01	Hot start current	1-100％	1％	50％
H02	Hot start time	0.0-2.0s	0.1s	0.5s
H03	Anti-stick function	OFF/ON	——	ON

Table 4-9-1: Sub-menu parameters

Hot start function

Setting hot start function includes adjusting hot start current and hot start time (please refer to “Sub-menu parameters setting” as follows)

Advantages:

- Improve ignition, even when using electrodes with poor ignition properties
- Better fusion of the base metal in the start-up phase, meaning fewer cold crack defects
- Greatly prevents slag inclusions

During the specified hot arc-starting time (H02), the welding current is increased to a certain value. This value (H01) is 1-100% higher than the pre-set welding current. As Fig. 4-9-1:

Graphic symbol $\mathbf{I_W}$……Preset welding current

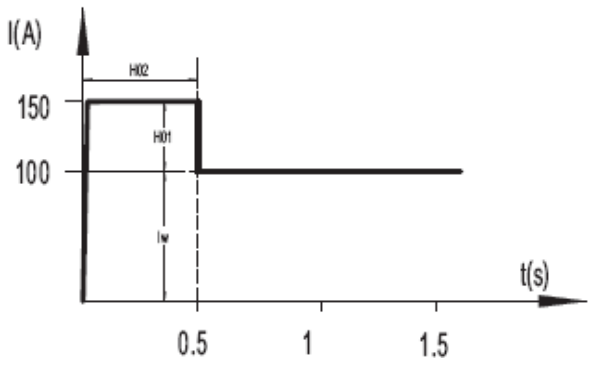

Fig. 4-9-1: Graphic symbol

As shown in Fig. 4-9-1, welding current is set as 100A. Hot arc-starting current (H01) is 50%. During the hot arc-starting time (H02, such as 0.5s), the actual welding current is 100A+ (50% of 100A)=150A.

Anti-stick function

In ON mode, power source has anti-stick function automatically. (Please refer to the below “sub-menu parameters setting” for specific method).

As the arc becomes shorter, the welding voltage may drop too much that the electrode will “stick”. This may also cause “burn-out” of the electrode.

Electrode burn-out can be prevented if the anti-stick function is activated. If the electrode begins to stick, the power source will immediately cut the welding current off. After the electrode has been detached from the work piece, welding can be continued without difficulty.

●Sub-menu parameters setting

Enter and Exit from the sub-menu operation as follows:

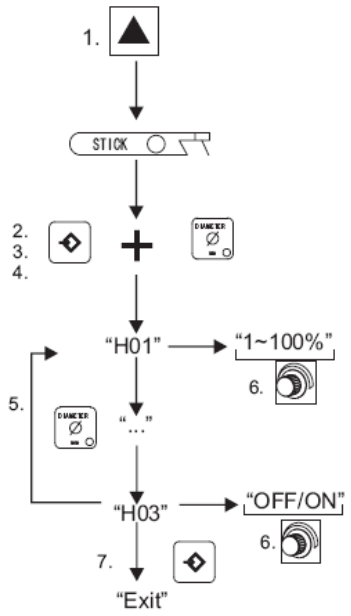

Fig. 5-9-2: Sub-menu parameters setting

1. Press “Welding process” button (9) in standby, choose “STICK” mode (the indicator on this button must light up);
2. Press and hold the Store button (5);
3. Press wire diameter selection button (6) at the same time;
4. Release Store button (5) and wire diameter selection button (6); the indicator (23) on sub-menu light up meaning that it enters into Sub-menu

Important! The last parameter to be selected is displayed on the sub-menu.

5. Press wire diameter selection button (6) to choose parameters
6. Press adjustment button (1) to change the selected parameters
7. Press store button (5) again and exit from the sub-menu mode; the indicator (23) on the sub-menu mode light off meaning exiting from the sub-menu

4-10 TIG welding process and operating

Warning! Operating the equipment incorrectly can cause serious injury and damage. Do not use the functions described here until you have read and completely understood all of the following guides:

- Safety rules
- Before commissioning

Warning!Electric shock can be fatal. If the machine is plugged into the mains supply during installation, there is a high risk of very serious injury and damage. Only operate the machine when

- thepower source is switched off,
- the machine is unplugged from the mains.

● Preparation

(1) Unplug the machine from mains
(2) Switch off the mains switch
(3) Dismount the MIG/MAG welding torch
(4) Plug the ground cable into output socket (+), and latch it in firmly
(5) Connect the other end of the ground cable to the work piece
(6) Plug the TIG torch into torch socket (-), and latch it by turning it clockwise
(7) Screw the pressure regulator onto the (argon) shielding-gas cylinder and tighten it
(8) Connect the gas hose to the pressure regulator
(9) Plug in the mains plug

●TIG welding

Warning! Electric shock is very dangerous! As soon as the mains switch is on, the tungsten electrode of the welding torch is power on. Make sure that the tungsten electrode does not touch any person or conductor or earthed parts.

1. Switch on the power source
2. With the “Process” button (9), select the TIG welding process

Important! Parameters that have been set on one control panel (e.g. wire feeder or remote control unit) might not be able to be changed on the other control panel (e.g. power source).

For panel control mode, (please refer to “P09 Digital/Analog signal selection” in “Sub-menu parameters set”) proceed as follows:

3. Press adjustment knob (1) to select the needed welding current (the parameter value will show on left-hand displayer)
4. Turn on the gas valve switch on the TIG torch (if there is no switch, connect the torch gas hose to the pressure regulator) and adjust the shielding-gas flow on the pressure regulator
5. Start welding

For remote control mode, (please refer to “P09 Digital/Analog signal selection” in “Sub-menu parameters set”) proceed as follows:

3. Adjust current adjusting knob in wire feeder to select the needed welding current (the parameter value will show on left-hand displayer)
4. Turn on the gas valve switch on the TIG torch (if there is no switch, connect the torch gas hose to the pressure regulator) and adjust the shielding-gas flow on the pressure regulator
5. Start welding

Igniting welding arc

Start arc by making the tungsten electrode touch with work piece surface.

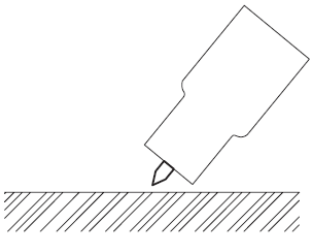

Fig. 4-10-1: Put nozzle on work piece

1. Put the nozzle on the ignition location so that there is a gap of 2-3mm (0.8-0.12in.) between the tungsten electrode and the work piece

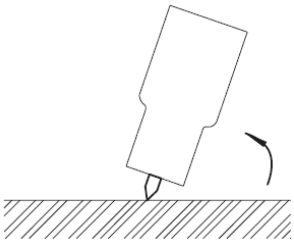

Fig. 4-10-2: Striking arc

2. Lift the torch slowly to ensure the tungsten electrode touches with the work piece

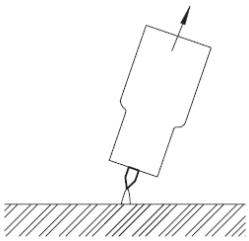

Fig. 4-10-3: Arc starting - welding

3. Lift the torch to normal welding position and keep the arc burning

4. Start welding

Finish welding

1. Lift the TIG torch to break the arc.
2. After the end of welding and a suitable gas post-flow time, close the gas valve on the TIG torch.

Important! All parameter command values that have been set by the adjustment button (1) will remain stored until the next time they are changed. This is true even the power source is switched off and on again in the meantime.

4-11 Gouging process and operating

Warning! Operating the equipment incorrectly can cause serious injury and damage. Do not use the functions described here until you have read and completely understood all of the following documents:

- Safety rules
- Before commissioning

Warning! An electric shock can be fatal. If the machine is plugged into the mains electricity supply during installation, there is a high risk of very serious injury and damage. Only carry out work on the machine when

- the mains switch is in the “OFF” position
- the machine is unplugged from the mains.

● **Preparation**

(1) Unplug the machine from mains
(2) Switch off the mains switch
(3) Dismount the MIG/MAG welding torch
(4) Plug the ground cable into output socket (-), and latch it in firmly
(5) Connect the other end of the ground cable to the work piece
(6) Plug the carbon arc gouging torch into output socket (+)
(7) Connect air tube to outlet of air compressor or other air supply tube
(8) Plug in the mains plug

● Carbon arc gouging

> ⚠ **Caution!** Electric shock is very dangerous. As soon as the mains switch is on, the gouging torch is power on. Make sure that the carbon rod does not touch any person or conductor or earthed parts.

1. Switch on the mains switch
2. With the "Process" button (9), select the Carbon arc gouging process

Important! Parameters that have been set on one control panel (e.g. wire feeder or remote control unit) might not be able to be changed on other control panel (e.g. power source).

For panel control mode, (please refer to "P09 Digital/Analog signal selection" in "Sub-menu parameters set") proceed as follows:

3. Press adjustment knob(1) to select the needed gouging current (the parameter value will show on left-hand displayer)
4. Turn on the compressed air valve switch and regulate the gas pressure and flow.
5. Start gouging.

For remote control mode, (please refer to "P09 Digital/Analog signal selection" in "Sub-menu parameters set") proceed as follows:

3. Press the "Current adjustment" knob on the wire feeder to choose the needed gouging current (the parameter value will show on left-hand displayer)
4. Turn on the compressed air valve switch and regulate the gas pressure and flow.
5. Start gouging.

4-12 Technical data

Single voltage

Model	POWER MIG GS 5000		
Voltage/ Frequency (3~)	380V±10％/50/60Hz	400V±10％/50Hz	415V±10％/50Hz
Rated input power (KVA)	25		
Rated input current(A)	46	43.7	42.1
Range of welding current(A)	25～500		
Range of welding voltage(V)	14～50		

Duty cycle(%)	60	
Full-load efficiency (%)	≥87	
Power factor	≥0.95	
Wire diameter (mm)	Φ0.8、Φ1.0、Φ1.2、Φ1.6	
CO2 Gas flow(L/min)	15～20	
Dimension (mm^3)	655×322×558	
Weight (Kg)	50	
Isolation degree	Main transformer/ output reactor	H

Table 4-9-1: POWER MIG GS 5000 technical data - single voltage

Multi voltage

Model	POWER MIG GS 5000
Voltage/ Frequency	Three Phase, AC 220/440V, 60Hz
Rated input power (KVA)	25
Rated input current (A)	46
Range of welding current (A)	25～500
Range of welding voltage (V)	14～50
Rated duty cycle (%)	220V input, 320A/30V 60% 440V input, 500A/39V 60%
Full-load efficiency (%)	89
Power factor	≥0.95
Wire diameter (mm)	Φ0.8、Φ1.0、Φ1.2、Φ1.6
Dimension (mm^3)	655×322×558
Weight (Kg)	50
Isolation degree	H

Table 4-9-2: POWER MIG GS 5000 technical data - multi voltage

4-13 Disassembly and reassembly

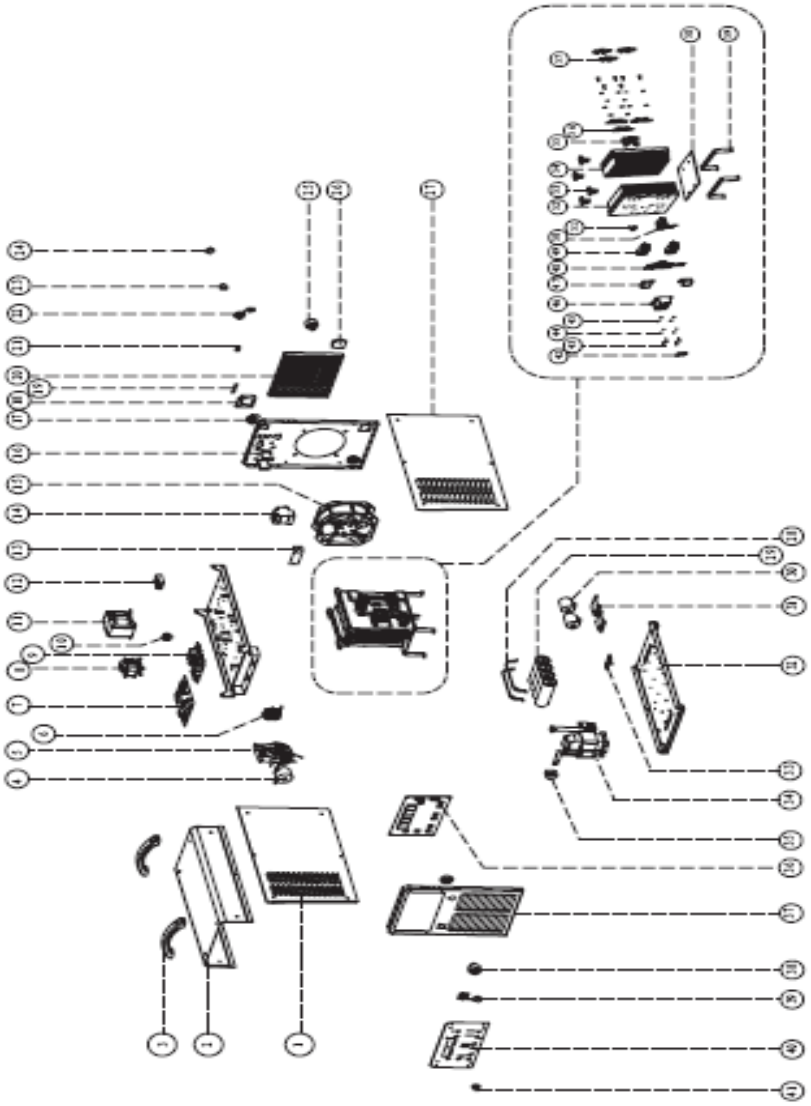

Fig. 4-13-1: Disassemble and reassembly

No.	Item	Stock No
1	Left plate	262017-00038 380V/50Hz
2	Top plate	262029-00029 380V/50Hz
3	Handle	766003-00138 380V/50Hz
4	Resonance capacitor	722001-00074 380V/50Hz
5	Main transformer	220629-00088 380V/50Hz
6	Resonance inductor	220521-00004 380V/50Hz
7	Main control board components	210580-00258 380V/50Hz
8	Power transformer I	220179-00207 380V/50Hz
		220179-00279 415V/50Hz
		220179-00494 CE model
9	Drive board	210310-00032 380V/50Hz
10	Drive board input inductance	220401-00001 380V/50Hz
11	Power transformer II	220179-00140 380V/50Hz
		220179-00280 415V/50Hz

		220179-00495 CE model
12	Solid state relay	715004-00003 380V/50Hz
13	Circuit breaker pressing plate	766003-00188 380V/50Hz
14	Circuit breaker	745011-00022 380V/50Hz
15	Fan	746001-00017 380V/50Hz
		746001-00019 415V/50Hz
		746001-00034 CE model
16	Rear plate	262011-00399 380V/50Hz
17	Cable	769001-00027 380V/50Hz
		769001-00027 415V/50Hz
		769001-00028 CE model
18	Rubber circuit breaker cover	766003-01522 380V/50Hz
19	Circuit breaker cover pressing plate	766003-01523 380V/50Hz
20	Plastic fan cover	766003-01521 380V/50Hz
21	Serial socket	740004-00010 380V/50Hz
22	Control socket	740001-00047 380V/50Hz
23	Recoverable overload protector	745013-00009 380V/50Hz
24	Hole plug	773007-00002 380V/50Hz
25	Quick socket	740002-00027 380V/50Hz
26	Single-phase flat-and-round two-pole socket-outlet	740004-00014 380V/50Hz
27	Right plate	262023-00102 380V/50Hz
28	Filter capacitor clamp	766003-00248 380V/50Hz
29	Filter capacitor	722001-00062 380V/50Hz
30	Polypropylene	722001-00070 380V/50Hz
31	Input capacitor holder	766002-00103 380V/50Hz
32	Bottom plate	263065-00170 380V/50Hz
33	Rack capacitor board	220293-00005 380V/50Hz
34	CD iron core output reactor	763004-00149 380V/50Hz
35	Current sensor	753001-00020 380V/50Hz
36	Display board	220503-00011 380V/50Hz
37	Front panel	262005-00153 380V/50Hz
38	Quick socket	740002-00027 380V/50Hz
39	Aerial socket	740001-00045 380V/50Hz
40	Control panel	262035-00036 380V/50Hz
41	Potentiometer	720031-00070 380V/50Hz
42	Varistor	720021-00017 380V/50Hz
		720021-00021 415V/50HZ
		720021-00017 CE model
43	Screw	779001-00051 380V/50Hz
44	Spring washer	779007-00008 380V/50Hz
45	Flat washer	779007-00019 380V/50Hz
46	Three phase rectifier module	735005-00003 380V/50Hz
47	Polypropylene	722001-00067 380V/50Hz
48	IGBT protection board	220005-00007 380V/50Hz
49	IGBT module	735007-00038 380V/50Hz
50	Input filter inductance	220479-00002 380V/50Hz
51	Temperature relay	745008-00006 380V/50Hz

52	IGBT radiator	264005-00090	380V/50Hz
53	Radiator support	766002-00090	380V/50Hz
54	Output diode radiator	264011-00025	380V/50Hz
55	Current exchange inductor	220281-00008	380V/50Hz
56	Fast recovery diode module	735006-00029	380V/50Hz
57	Diode protection board	220455-00002	380V/50Hz
58	Radiator junction plate	775004-00027	380V/50Hz
59	Radiator support frame	766002-00078	380V/50Hz

Table 4-13-1: Main components list

Note: This table is for reference only, and the detail of actual product shall prevail. If no special remarks, the input voltage mentioned in above table is three phase.

5-TROUBLE SHOOTING

> ⚠ **Warning!** An electric shock can be fatal. Before doing any work on the machine:
> -Switch it off and unplug it from the mains
> -Put up a clearly legible and easy-to-understand warning sign to stop anybody inadvertently switching it on again
> -Check to make sure the electrically charged components (e.g.capacitors) have been discharged.
> -Bolts in machine case also work for ground connection. Never use other bolt that can not work for ground connection.

● Error code display

This series of machines have automatic protection and error code display function. Relevant Cause & Remedy can be found according to below Error codes, as shown in Table 5-1

Error code	Trouble	Cause	Remedy
E10	Torch trigger fault	No current output after pressing torch trigger for 2s	Release torch trigger
E15	Torch fault when turn on the machine	The torch trigger is OFF when machine is ON	Turn off the machine, reset the torch trigger
E17	Over-current protection	Short circuit of Output; Current Sensor fault	Check output cable and replace Current Sensor
E18	Voltage feedback is unusual	Voltage Feedback Wire is broken; or Main Control Board is damaged	Check Voltage Feedback Wire ; or replace Main Control Board
E19	Over-heat protection	The welding machine is over heat; or Temperature Relay fault	Shut down the welding machine and wait for cooling; or replace Temperature Relay
E30	Wire feeding is abnormal	The current of Wire Feeder Motor is too high	Check and repair wire feeder
E40	Communication between the display board and main control board is abnormal	Main control board does not get the signal from the display board	Check and repair the wire between them
E42	Communication between the welding machine and wire feeder is abnormal	Welding machine does not get the signal from the wire feeder	Check the control cable between them
E0A	Water-cooling is abnormal	No circulating water in water cooling system	Check and repair

Table 5-1: Displayed error code

Important! If any error message that is not described here appears on the displays, then the fault is one that can only be put right by a service technical. Make a note of the error message shown in the display, and the serial number and configuration of the power source, and get in touch with our after-sale service, giving them a detailed description of the error.

● Power source trouble shooting

Note! The flowing troubles and causes are uncertain. However, during the process of MIG Pulse and the normal using conditions, that might happen.

Trouble	Remedy
Power source cannot work	• Check the mains supply lead, make sure that the mains plug is plugged in • Check whether the air switch is on • Check the fuse and breaker • Check whether the junction cable and connectors between power source and wire feeder are correctly fixed. • Check whether the ground cable is connected
Dirty welding face, poor welding seam	• Check whether shielding gas is provided • Check and set shielding gas flow • Check whether shielding gas is correct • Check whether polarity of welding torch is correct
Unstable welding performance	• Check whether wire feeder correctly operate • Check whether wire feed rollers correctly installed • Check whether correctly adjust the braking force of wire spool • Check whether the guide tube of welding torch is blocked, replace whether necessary • Check whether the size and material of filling metal and the guide tube is suitable • Check the size, type and wear patterns of tip • Check whether the welding torch is too hot • Check whether the cables and ground cable are firmly connected • Check whether the setting parameters are correct
Filler wire cannot feed in	• Check the wire feeder • Check ON-OFF function of welding torch • Check whether guide tube of welding torch is blocked • Check the size, type and wear patterns of tip
Too much spatter	• Check whether the setting parameters are correct • Check the setting of arc force • Check the length of the cables • Check the type and flow rate of the shielding gas • Check whether welding cable is correctly connected • Check the filing metal • Check whether the feeding of wire is unobstructed • Check whether default phase

Table 5-2: Trouble shooting

6 –CARE AND MAINTENANCE

- **Before open the machine**

Warning! An electric shock can be fatal. Before doing any work on the machine:

-Switch it off and unplug it from the mains

-Put up a clearly legible and easy-to-understand warning sign to stop anybody inadvertentlyswitching it on again

-Check to make sure the electrically charged components (e.g.capacitors) have been discharged.

-Bolts in machine case also work for ground connection. Never use other bolt that cannot work for ground connection.

Maintenance

Please follow the instructions as below to ensure normal lifespan of power source.

- Conduct safety check at regular intervals (see “Safety rules”)
- Dismantle machine side panels and clean machine inside with clean and low-pressure compressed air by professional technician, not less than twice per year. Clean the components at a certain distance only;
- If a lot of dust has accumulated, clean the cooling-air ducts.

- **Maintenance of water-cooled welding torch**

For water-cooled welding torch:

- Check the connections of water cooling system
- Check the coolant level and cleanliness(clean coolant only)
- Frequently check coolant’s backflow state

- **Daily maintenance**

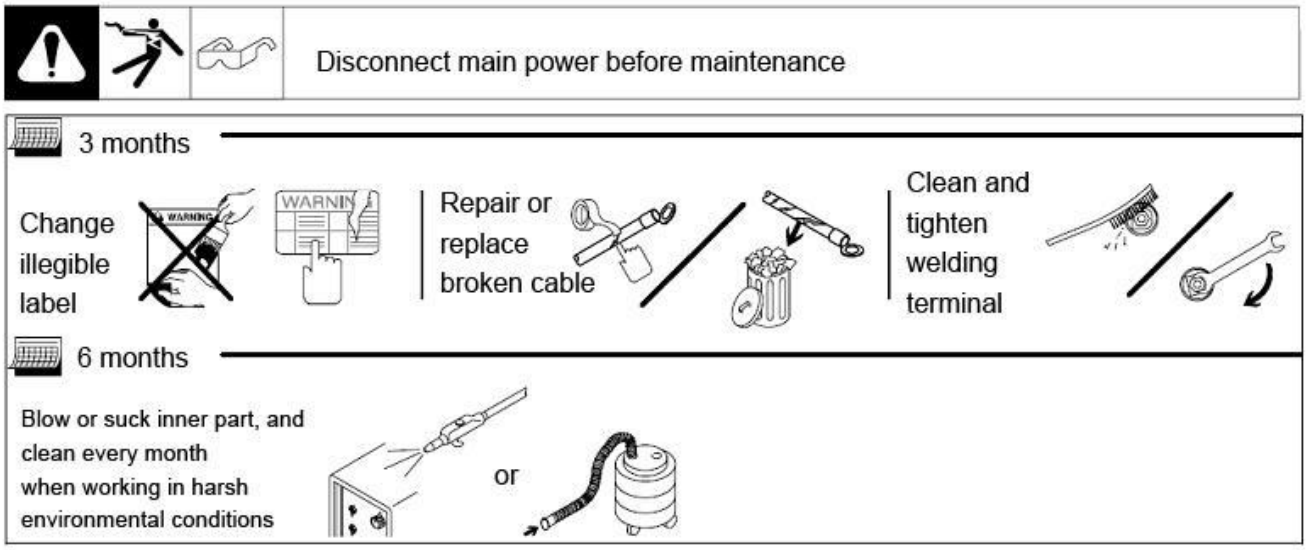

Fig. 6-1: Daily maintenance

7 - BASIC WELDING TECHNIQUE

Note! This section being general welding technique guide is for reference only. Specific functions of your machine please refer to previous chapters.

7-1 MIG (GMAW/FCAW) welding technique

Two different welding processes are covered in this section (GMAW and FCAW), with the intention of providing the very basic concepts in using the Mig mode of welding, where a welding gun is hand held, and the electrode (welding wire) is fed into a weld puddle, and the arc is shielded by an inert welding grade shielding gas or inert welding grade shielding gas mixture.

GAS METAL ARC WELDING (GMAW): This process, also known as MIG welding, CO2 welding, Micro WireWelding, short arc welding, dip transfer welding, wire welding etc., is an electric arc welding process which fuses together the parts to be welded by heating them with an arc between a solid continuous, consumable electrode and the work. Shielding is obtained from an externally supplied welding grade shielding gas or welding grade shielding gas mixture. The process is normally applied semi automatically; however the process may be operated automatically and can be machine operated. The process can be used to weld thin and fairly thick steels, and some non-ferrous metals in all positions.

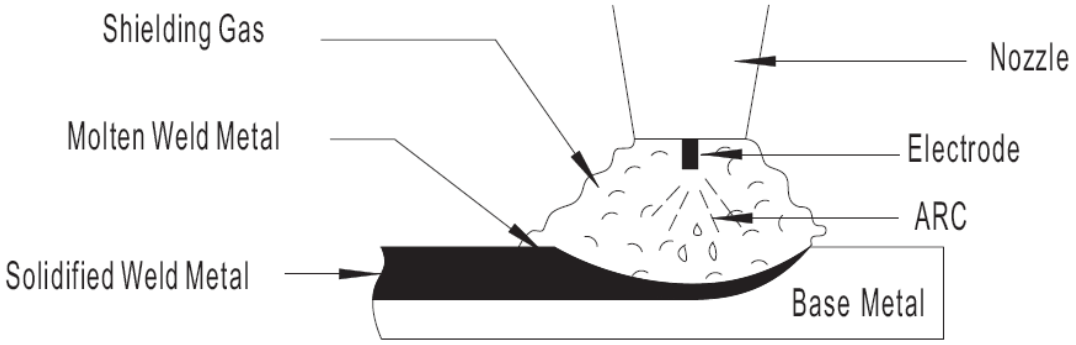

Fig. 7-1-1: GMAW process

FLUX CORED ARC WELDING (FCAW): This is an electric arc welding process which fuses together the parts to be welded by heating them with an arc between a continuous flux filled electrode wire and the work. Shielding is obtained through decomposition of the flux within the tubular wire. Additional shielding may or may not be obtained from an externally supplied gas or gas mixture. The process is normally applied semi automatically; however the process may be applied automatically or by machine. It is commonly used to weld large diameter electrodes in the flat and horizontal position and small electrode diameters in all positions. The process is used to a lesser degree for welding stainless steel and for overlay work.

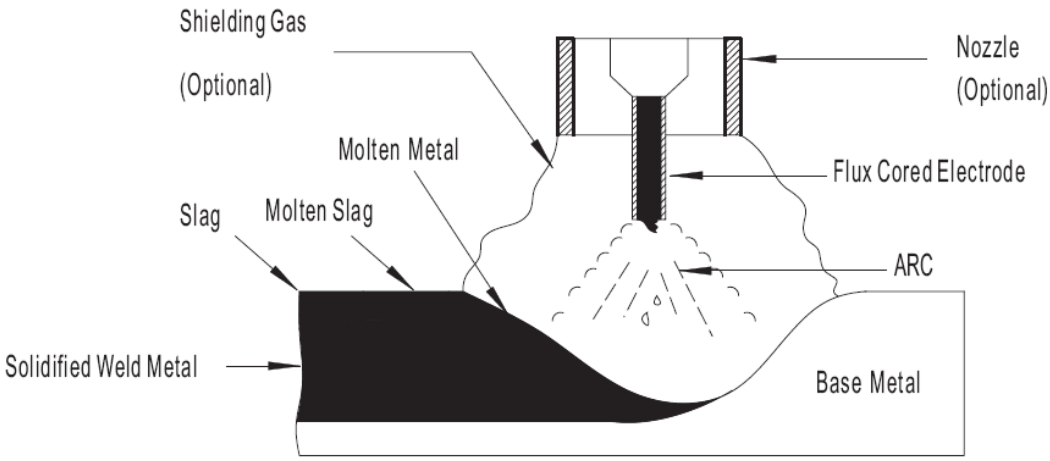

Fig. 7-1-2: FCAW process

Position of MIG torch

The angle of MIG torch to the weld has an effect on the width of the weld.

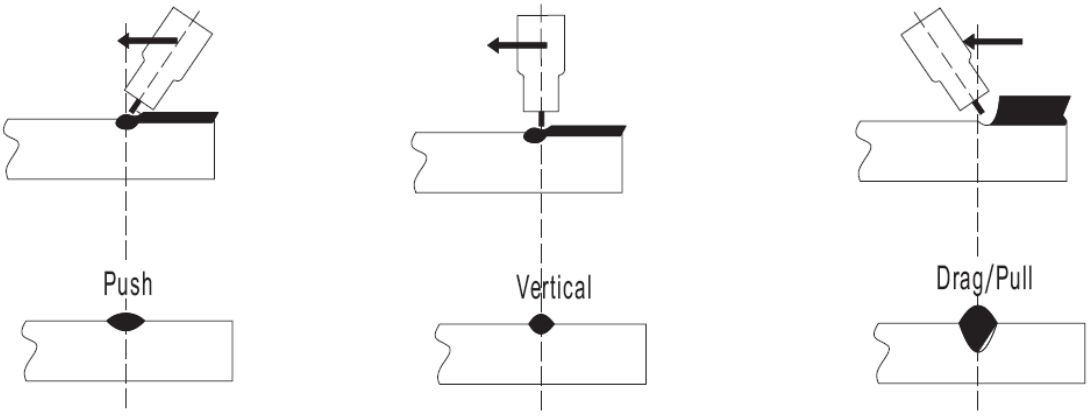

Fig. 7-1-3: Position of TIG torch

The welding gun should be held at an angle to the weld joint. (see Secondary Adjustment Variables below)
Hold the gun so that the welding seam is viewed at all times. Always wear the welding helmet with proper filter lenses and use the proper safety equipment.

Note! Do not pull the welding gun back when the arc is established. This will create excessive wire extension (stick-out) and make a very poor weld.

The electrode wire is not energized until the gun trigger switch is depressed. The wire may therefore be placed on the seam or joint prior to lowering the helmet.

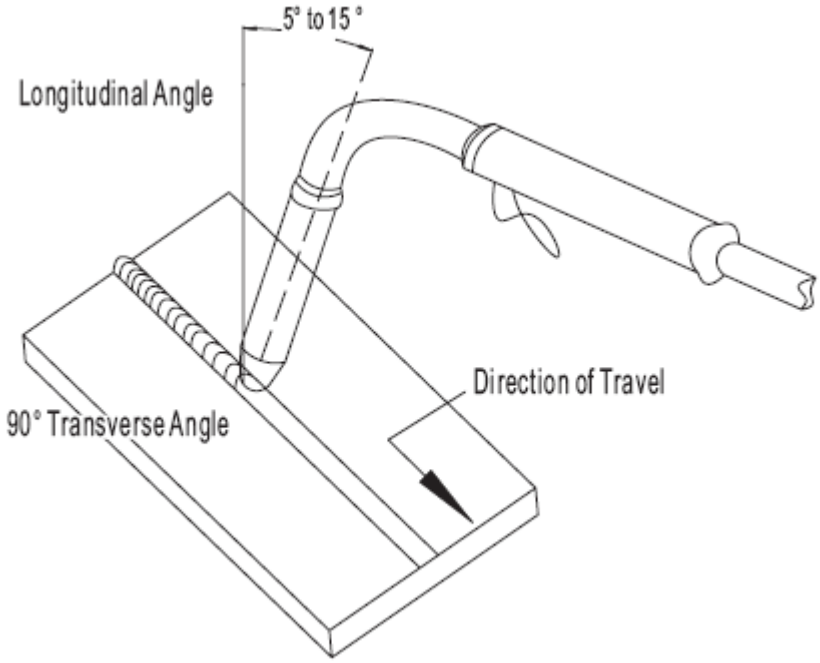

Fig. 7-1-4: Butt & horizontal welds

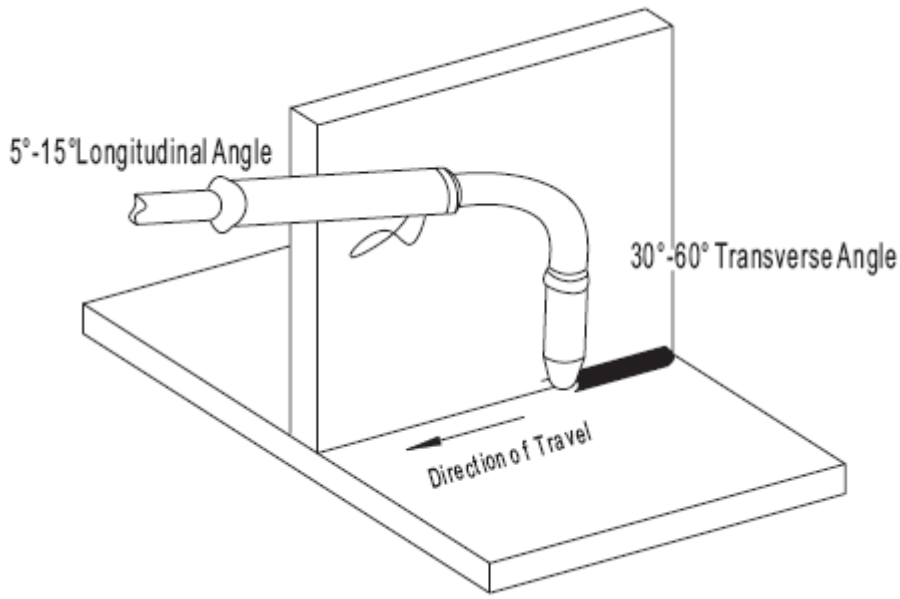

Fig. 7-1-5: Horizontal fillet weld

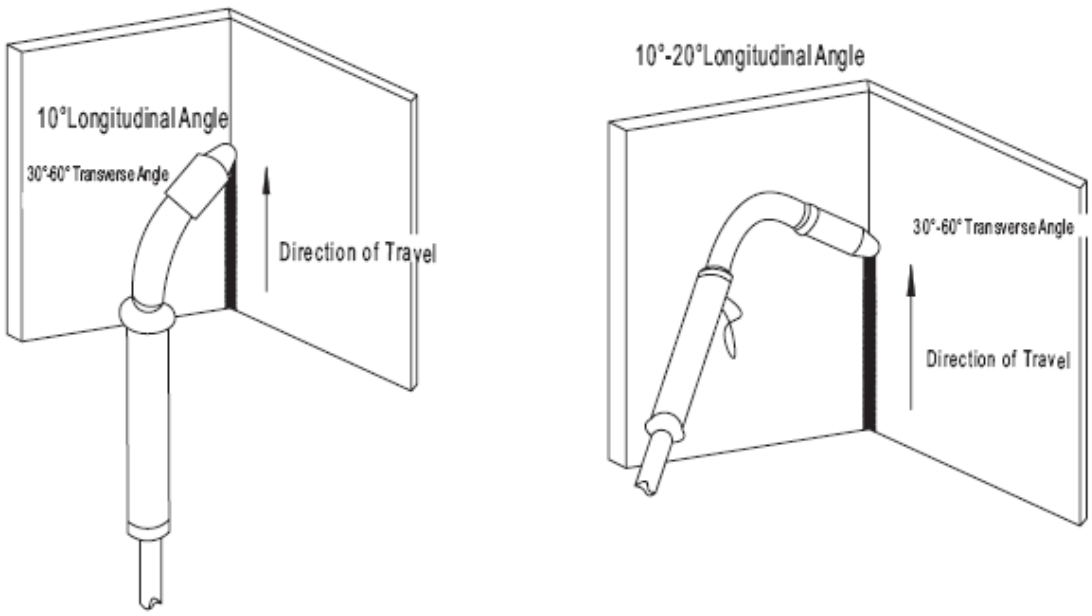

Fig. 7-1-6: Vertical fillet welds

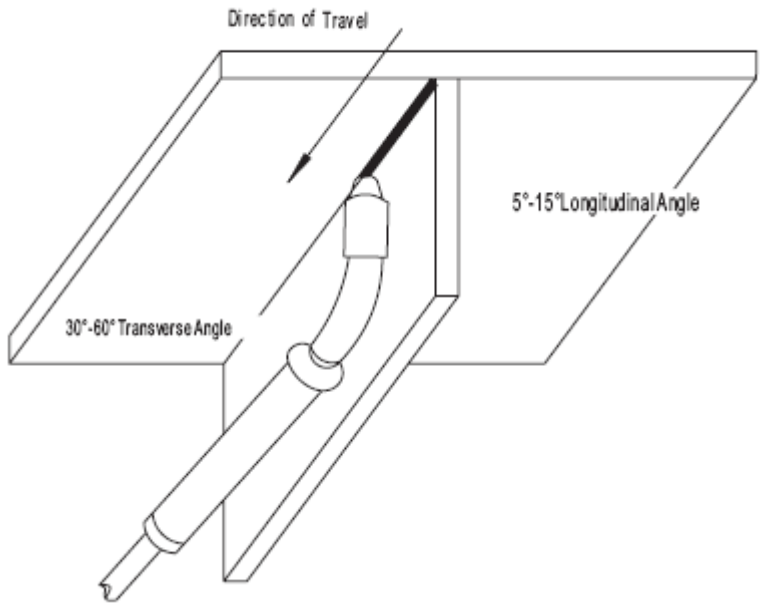

Fig. 7-1-7: Overhead weld

Distance from the MIG torch nozzle to the work piece

The electrode wire stick out from the MIG Torch nozzle should be between 10mm to 20.0mm. This distance may vary depending on the type of joint that is being welded.

Travel speed

The speed at which the molten pool travels influences the width of the weld and penetration of the welding run.

MIG welding (GMAW) variables

Most of the welding done by all processes is on carbon steel. The items below describe the welding variables in short-arc welding of 24gauge (0.024”, 0.6mm) to 1/4” (6.4mm) mild sheet or plate. The applied techniques and end results in the GMAW process are controlled by these variables.

Preselected variables

Preselected variables depend upon the type of material being welded, the thickness of the material, the welding position, the deposition rate and the mechanical properties. These variables are:

• Type of electrode wire
• Size of electrode wire
• Type of gas (not applicable to self shielding wires FCAW)
• Gas flow rate (not applicable to self shielding wires FCAW)

Primary adjustable variables

These control the process after preselected variables have been found. They control the penetration, bead width, bead height, arc stability, deposition rate and weld soundness. They are:

• Arc Voltage
• Welding current (wire feed speed)
• Travel speed

Secondary adjustable variables

These variables cause changes in primary adjustable variables which in turn cause the desired change in the bead formation. They are:

1. Stick-out (distance between the end of the contact tube (tip) and the end of the electrode wire). Maintain at about 10mm stick-out
2. Wire Feed Speed. Increase in wire feed speed increases weld current. Decrease in wire feed speed decreases weld current.

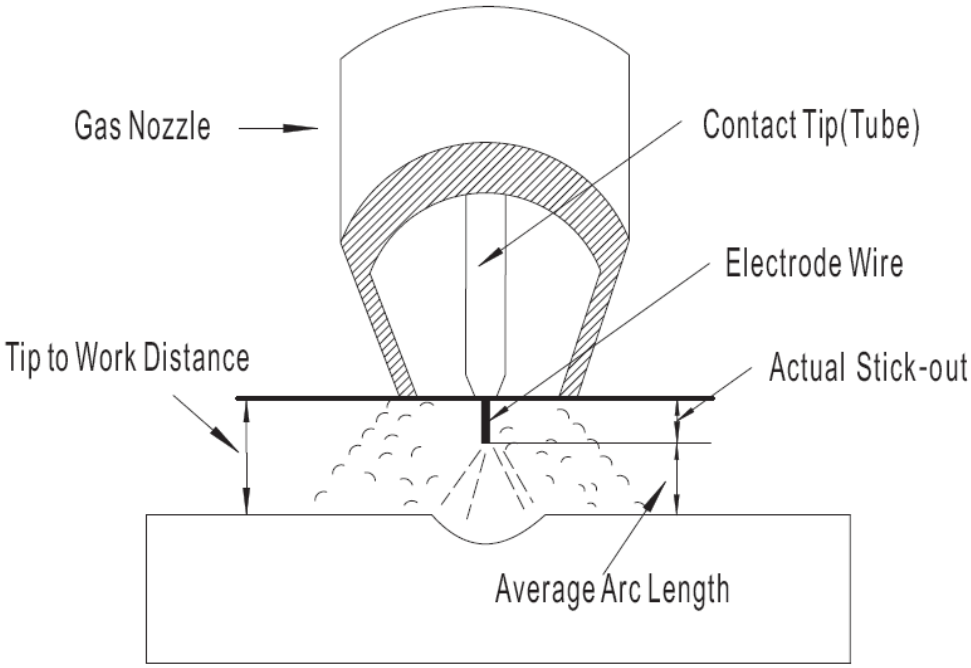

Fig. 7-1-8: Electrode stick-out

3. Nozzle Angle. This refers to the position of the welding gun in relation to the joint. The transverse angle is usually one half the included angle between plates forming the joint. The longitudinal angle is the angle between the center line of the welding gun and a line perpendicular to the axis of the weld. The longitudinal angle is generally called the Nozzle Angle and can be either trailing (pulling) or leading (pushing). Whether the operator is left handed or right handed has to be considered to realize the effects of each angle in relation

to the direction of travel.

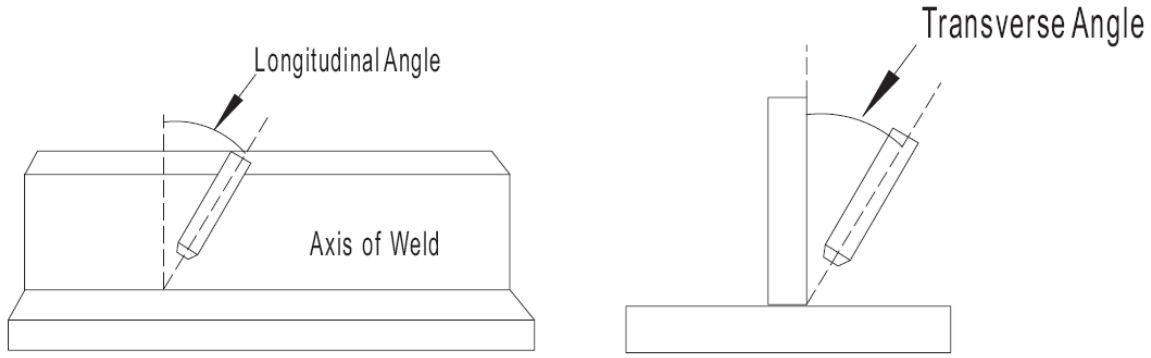

Fig. 7-1-9: Transverse and Longitudinal

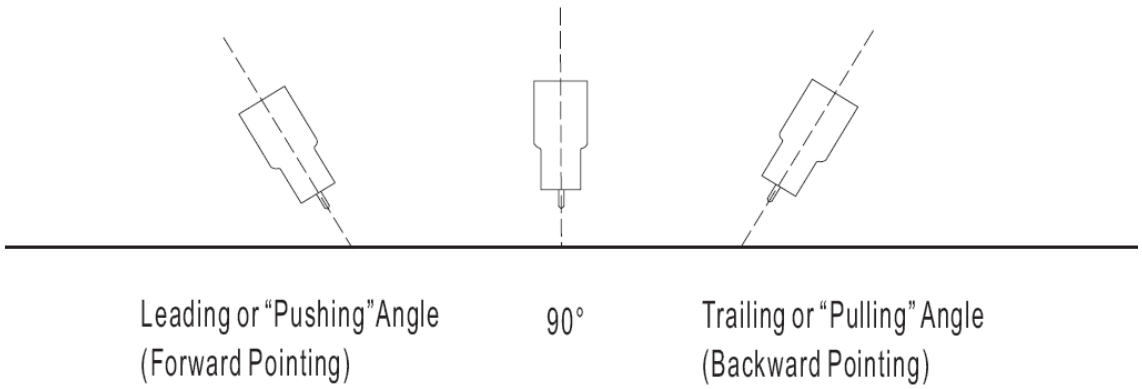

Fig. 7-1-10: Nozzle Angle Right Handed Operator

Establishing the Arc and Making Weld Beads

Before attempting to weld on a finished piece of work, it is recommended that practice welds be made on a sample metal of the same material as that of the finished piece.

The easiest welding procedure for the beginner to experiment with MIG welding is the flat position. The equipment is capable of flat, vertical and overhead positions.

For practicing MIG welding, secure some pieces of 16 or 18 gauge (0.06" 1.5mm or 0.08" 2.0mm) mild steel plate 6" x 6" (150 x 150mm). Use 0.030" (0.8mm) flux cored gasless wire or a solid wire with shielding gas.

Setting of the power source

Power source and Wirefeeder setting requires some practice by the operator, as the welding plant has two control settings that have to balance. These are the Wirespeed control and the welding Voltage Control. The welding current is determined by the Wirespeed control, the current will increase with increased Wirespeed, resulting in a shorter arc. Less wire speed will reduce the current and lengthen the arc. Increasing the welding voltage hardly alters the current level, but lengthens the arc. By decreasing the voltage, a shorter arc is obtained with a little change in current level.

When changing to a different electrode wire diameter, different control settings are required. A thinner electrode wire needs more Wirespeed to achieve the same current level.

A satisfactory weld cannot be obtained if the Wirespeed and Voltage settings are not adjusted to suit the electrode wire diameter and the dimensions of the work piece.

If the Wirespeed is too high for the welding voltage, “stubbing” will occur as the wire dips into the molten pool and does not melt. Welding in these conditions normally produces a poor weld due to lack of fusion. If, however, the welding voltage is too high, large drops will form on the end of the wire, causing spatter. The correct setting of voltage and Wirespeed can be seen in the shape of the weld deposit and heard by a smooth
regular arc sound. Refer to the Weld Guide located on the inside of the wirefeed compartment door for setup information.

Electrode wire size selection
The choice of Electrode wire size and shielding gas used depends on the following

• Thickness of the metal to be welded
• Type of joint
• Capacity of the wire feed unit and Power Source
• The amount of penetration required
• The deposition rate required
• The bead profile desired
• The position of welding
• Cost of the wire

7-2 TIG welding technique

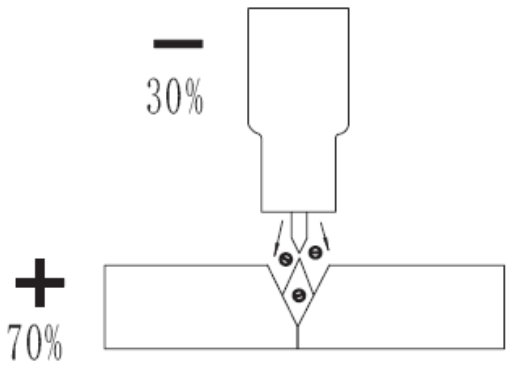

Fig. 7-2-1: Heat Input

The DC power source uses what is known as DC (direct current) in which the main electrical component known as electrons flow in only one direction from the negative pole (terminal) to the positive pole (terminal). In the DC electrical circuit there is an electrical principle at work which should always be taken into account when using any DC circuit. With a DC circuit 70% of the energy (heat) is always on the positive side. This needs to be understood because it determines what terminal the TIG torch will be connected to (this rule applies to all the other forms of DC welding as well).

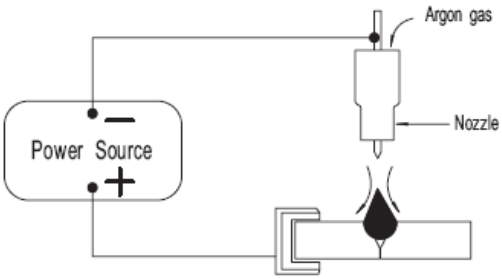

Fig. 7-2-2: TIG ARC

DC TIG welding is a process in which an arc is struck between a TUNGSTEN electrode and the metal work piece. The weld area is shielded by an inert gas flow to prevent contamination of the tungsten, molten pool and weld area.

When the TIG arc is struck the inert gas is ionized and superheated changing it's molecular structure which converts it into a plasma stream. This plasma stream flowing between the tungsten and the work piece is the TIG arc and can be as hot as 9000K+. It is a very pure and concentrated arc which provides the controlled melting of most metals into a weld pool. TIG welding offers the user the greatest amount of flexibility to weld the widest range of material and thickness and types. DC TIG welding is also the cleanest weld with no sparks or spatter.

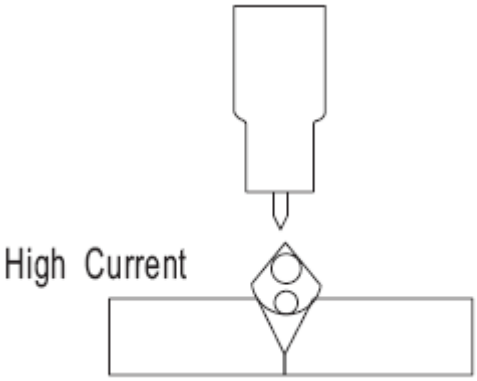

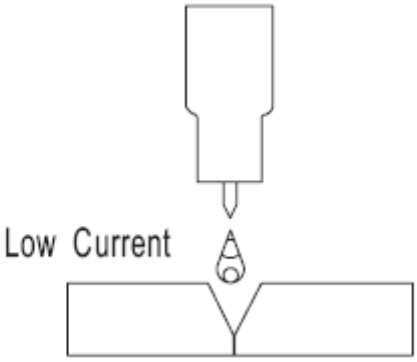

Fig. 7-2-3: Low current

Fig. 7-2-4: High current

The intensity of the arc is proportional to the current that flows from the tungsten. The welder regulates the welding current to adjust the power of the arc. Typically thin material requires a less powerful arc with less heat to melt the material so less current (amps) is required, thicker material requires a more powerful arc with more heat so more current (amps) are necessary to melt the material.

LIFT ARC IGNITION for TIG (tungsten inert gas) Welding

Lift Arc is a form of arc ignition where the machines has low voltage on the electrode to only a few volts, with a current limit of one or two amps (well below the limit that causes metal to transfer and contamination of the weld or electrode). When the machine detects that the tungsten has left the surface and a spark is present, it immediately (within microseconds) increases power, converting the spark to a full arc. It is a simple, safe lower cost alternative arc ignition process to HF (high frequency) and a superior arc start process to scratch start.

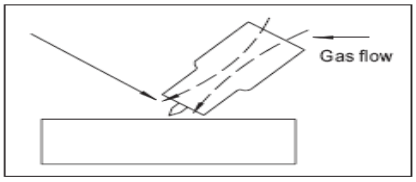

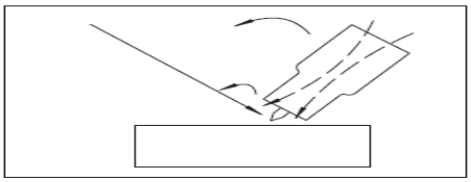

Fig. 7-2-5: Tungsten off the Work

Fig. 7-2-6: Tungsten Touches the Work

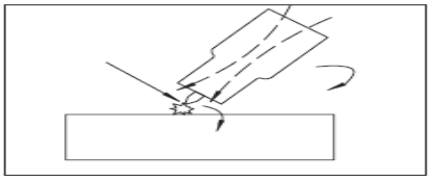

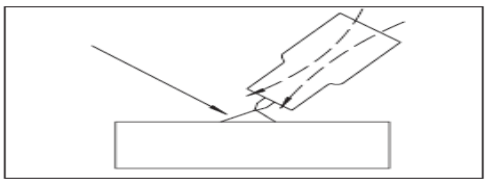

Fig. 7-2-7: Arc Ignition Fig. 7-2-8: Established TIG Arc

TIG Welding Fusion Technique

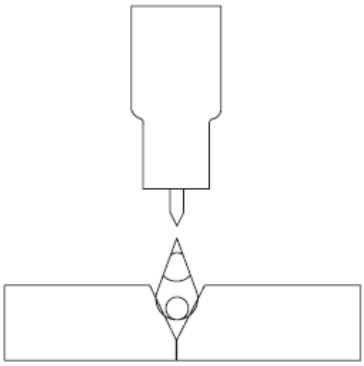

Fig. 7-2-9: TIG Arc

Manual TIG welding is often considered the most difficult of all the welding processes. Because the welder must maintain a short arc length, great care and skill are required to prevent contact between the electrode and the workpiece. Similar to Oxygen Acetylene torch welding, TIG welding normally requires two hands and in most instances requires the welder to manually feed a filler wire into the weld pool with one hand while manipulating the welding torch in the other. However, some welds combining thin materials can be accomplished without filler metal like edge, corner, and butt joints. This is known as Fusion welding where the edges of the metal pieces are melted together using only the heat and arc force generated by the TIG arc. Once the arc is started the torch tungsten is held in place until a weld pool is created, a circular movement of the tungsten will assist is creating a weld pool of the desired size. Once the weld pool is established tilt the torch at about a 75° angle and move smoothly and evenly along the joint while fusing the materials together.

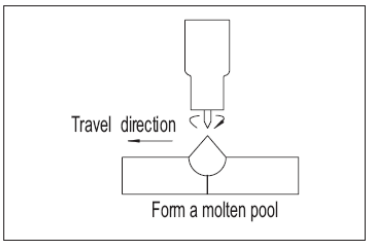

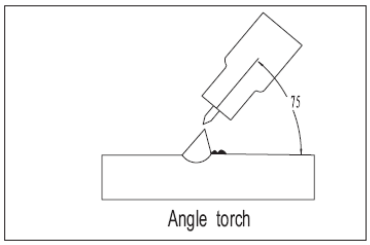

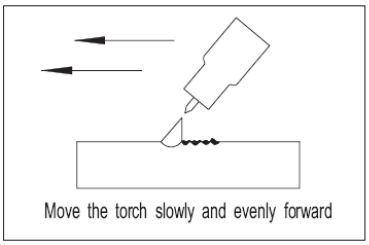

Fig. 7-2-10: Form a Weld Pool Fig. 7-2-11: Angle Torch Fig. 7-2-12: Torch Move

TIG Welding with Filler Wire Technique

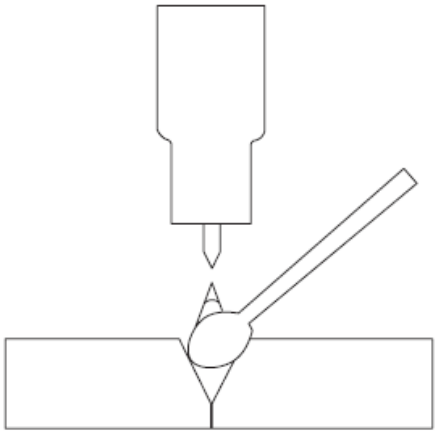

Fig. 7-2-13: Add TIG Filler Wire

It is necessary in many situations with TIG welding to add a filler wire into the weld pool to build up weld reinforcement and create a strong weld. Once the arc is started the torch tungsten is held in place until a weld pool is created, a circular movement of the tungsten will assist is creating a weld pool of the desired size. Once the weld pool is established tilt the torch at about a 75° angle and move smoothly and evenly along the joint. The filler metal is introduced to the leading edge of the weld pool. The filler wire is usually held at about a 15° angle and fed into the leading edge of the molten pool, the arc will melt the filler wire into the weld pool as the torch is moved forward. Also a dabbing technique can be used to control the amount of filler wire added, the wire is fed into the molten pool and retracted in a repeating sequence as the torch is moved slowly and evenly forward. It is important during the welding to keep the molten end of the filler wire inside the gas shield as this protects the end of the wire from being oxidised and contaminating the weld pool.

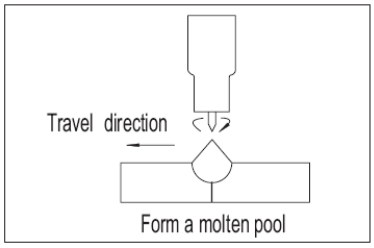

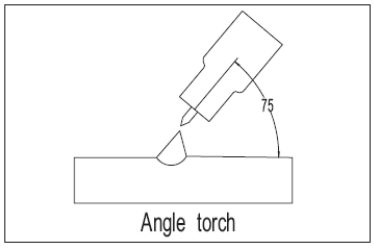

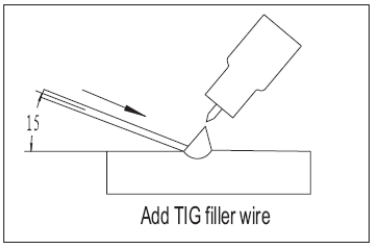

Fig. 7-2-14: Form a Weld Pool Fig. 7-2-15: Angle Torch Fig. 7-2-16: Add TIG Filler Wire

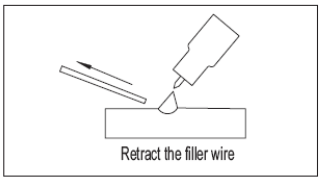

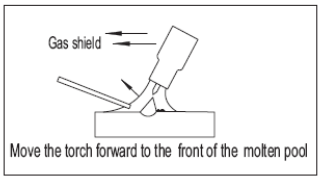

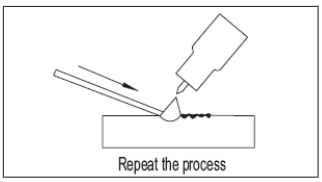

Fig. 7-2-17: Retract the Filler Wire Fig. 7-2-18: Torch Move Fig. 7-2-19: Repeat the Process

Tungsten Electrodes

Tungsten is a rare metallic element used for manufacturing TIG welding electrodes. The TIG process relies on tungsten's hardness and high-temperature resistance to carry the welding current to the arc. Tungsten has the highest melting point of any metal, 3,410 degrees Celsius.

Tungsten electrodes are nonconsumable and come in a variety of sizes, they are made from pure tungsten or an alloy of tungsten and other rare earth elements. Choosing the correct tungsten depends on the material being welded, the amount of amps required and whether you are using AC or DC welding current.

Follow are common used tungsten types: Thoriated, Ceriated, Lanthanated, Zirconiated

Table 7-2-1: Tungsten Electrodes Rating for Welding Currents

Tungsten Diameter mm	**DC Current Amps Torch Negative 2% Thoriated**
1.0mm	15 - 80
1.6mm	70 -150
2.4mm	150 - 250
3.2mm	250 - 400
4.0mm	400 - 500

Tungsten Preparation

Always use DIAMOND wheels when grinding and cutting. While tungsten is a very hard material, the surface of a diamond wheel is harder, and this makes for smooth grinding. Grinding without diamond wheels, such as aluminium oxide wheels, can lead to jagged edges, imperfections, or poor surface finishes not visible to the eye that will contribute to weld inconsistency and weld defects.

Always ensure to grind the tungsten in a longitudinal direction on the grinding wheel. Tungsten electrodes are manufactured with the molecular structure of the grain running lengthwise and thus grinding crosswise is "grinding against the grain." If electrodes are ground crosswise, the electrons have to jump across the grinding marks and the arc can start before the tip and wander. Grinding longitudinally with the grain, the electrons flow steadily and easily to the end of the tungsten tip. The arc starts straight and remains narrow, concentrated, and stable.

Table 7-2-2: Tungsten Diameter Rating for Angle and Current

Tungsten Diameter	**Constant Included Angle - Degrees**	**Current Range Amps**
1.0mm	20	05 - 30
1.6mm	25	08 - 50
1.6mm	30	10 - 70
2.4mm	35	12 - 90
2.4mm	45	15 - 150
3.2mm	60	20 - 200
3.2mm	90	25 - 250

7-3 SMAW (Stick) welding technique

One of the most common types of arc welding is manual metal arc welding (MMA) or stick welding. An electric current is used to strike an arc between the base material and a consumable electrode rod or 'stick'. The electrode rod is made of a material that is compatible with the base material being welded and is covered with a flux that gives off gaseous vapours that serve as a shielding gas and providing a layer of slag, both of which protect the

weld area from atmospheric contamination. The electrode core itself acts as filler material the residue from the flux that forms a slag covering over the weld metal must be chipped away after welding.

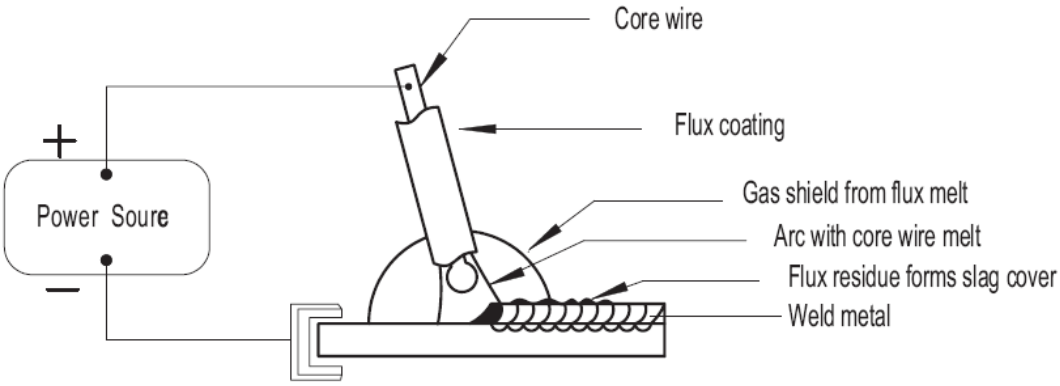

Fig. 7-3-1: Stick ARC

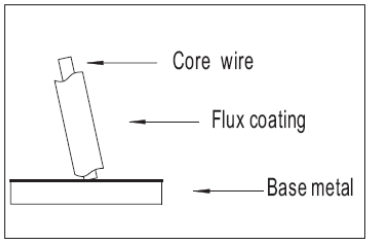

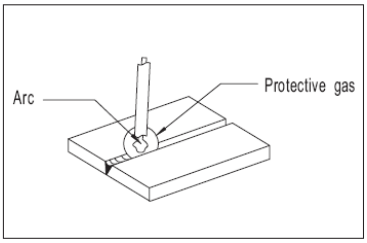

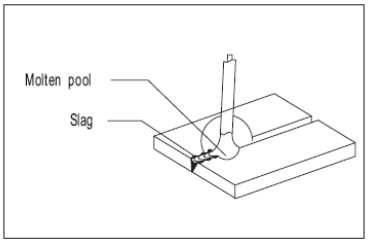

Fig. 7-3-2: ARC Ignition Fig. 7-3-3: Weld pool Protection Fig. 7-3-4: Slag

• The arc is initiated by momentarily touching the electrode to the base metal.
• The heat of the arc melts the surface of the base metal to form a molten pool at the end of the electrode.

• The melted electrode metal is transferred across the arc into the molten pool and becomes the deposited weld metal.
• The deposit is covered and protected by a slag which comes from the electrode coating.
• The arc and the immediate area are enveloped by an atmosphere of protective gas.

Manual metal arc (stick) electrodes have a solid metal wire core and a flux coating. These electrodes are identified by the wire diameter and by a series of letters and numbers. The letters and numbers identify the metal alloy and the intended use of the electrode.

The Metal Wire Core works as conductor of the current that maintains the arc.
The core wire melts and is deposited into the welding pool.

The covering on a shielded metal arc welding electrode is called Flux.
The flux on the electrode performs many different functions.
These include:
● producing a protective gas around the weld area
● providing fluxing elements and deoxidizers
● creating a protective slag coating over the weld as it cools

- establishing arc characteristics
- adding alloying elements

Covered electrodes serve many purposes in addition to adding filler metal to the molten pool. These additional functions are provided mainly by the covering on the electrode.

MMA (Stick) Welding Fundamentals

Electrode Selection

As a general rule, the selection of an electrode is straight forward, in that it is only a matter of selecting an electrode of similar composition to the parent metal. However, for some metals there is a choice of several electrodes, each of which has particular properties to suit specific classes of work. It is recommend to consult your welding supplier for the correct selection of electrode.

Table 7-3-1: Electrode Size

Average Thickness of Material	**Maximum Recommended Electrode Diameter**
1.0 - 2.0mm	2.5mm
2.0 - 5.0mm	3.2mm
5.0 - 8.0mm	4.0mm
8.0 - > mm	5.0mm

The size of the electrode generally depends on the thickness of the section being welded, and the thicker the section the larger the electrode required. The table gives the maximum size of electrodes that maybe used for various thicknesses of section base on using a general purpose type 6013 electrode.

Table 7-3-2: Welding Current (Amperage)

Electrode Size ø mm	**Current Range (Amps)**
2.5mm	60 - 95
3.2mm	100 - 130
4.0mm	130 - 165
5.0mm	165 - 260

Correct current selection for a particular job is an important factor in arc welding. With the current set too low, difficulty is experienced in striking and maintaining a stable arc. The electrode tends to stick to the work, penetration is poor and beads with a distinct rounded profile will be deposited. Too high current is accompanied by overheating of the electrode resulting undercut and burning through of the base metal and producing excessive spatter. Normal current for a particular job may be considered as the maximum, which can be used without burning through the work, over-heating the electrode or producing a rough spattered surface.

The table shows current ranges generally recommended for a general purpose type 6013 electrode.

Arc Length

To strike the arc, the electrode should be gently scraped on the work until the arc is established. There is a simple rule for the proper arc length; it should be the shortest arc that gives a good surface to the weld. An arc too long reduces penetration, produces spatter and gives a rough surface finish to the weld. An excessively short arc will cause sticking of the electrode and result in poor quality welds. General rule of thumb for down hand welding is to have an arc length no greater than the diameter of the core wire.

Electrode Angle

The angle that the electrode makes with the work is important to ensure a smooth, even transfer of metal. When welding in down hand, fillet, horizontal or overhead the angle of the electrode is generally between 5 and 15 degrees towards the direction of travel. When vertical up welding the angle of the electrode should be between 80 and 90 degrees to the work piece.

Travel Speed

The electrode should be moved along in the direction of the joint being welded at a speed that will give the size of run required. At the same time, the electrode is fed downwards to keep the correct arc length at all times. Excessive travel speeds lead to poor fusion, lack of penetration etc, while too slow a rate of travel will frequently lead to arc instability, slag inclusions and poor mechanical properties.

Material and Joint Preparation

The material to be welded should be clean and free of any moisture, paint, oil, grease, mill scale, rust or any other material that will hinder the arc and contaminate the weld material. Joint preparation will depend on the method used include sawing, punching, shearing, machining, flame cutting and others. In all cases edges should be clean and free of any contaminates. The type of joint will be determined by the chosen application.

7-4 Gouging technique guide

Hot current between carbon electrode and metal melts the metal. Meanwhile, high-speed compressed air flow blow off the melting metal. It realizes chipping and cutting for the base metal.

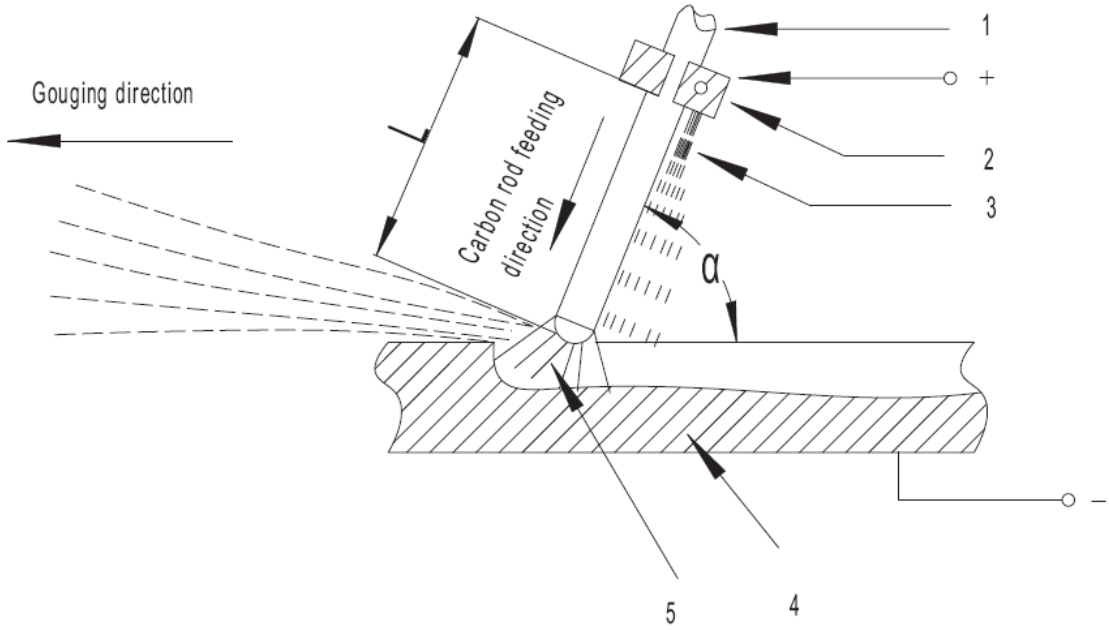

Fig. 7-4-1: CAC-A process

1- Carbon rod 2- Gouging torch chuck 3- Compressed air 4- Work piece 5- Arc L- Carbon rod extension length α-Angle between carbon rod and work piece

Welding parameter for CAC-A and effects

11 Power source polarity

CAC-A usually choose DC reversed polarity (work piece connect to negative electrode). So the arc is stable, melting metal mobility is better, freezing point is lower, so reversed polarity ensure stable gouging process, arc sends out continuous swish sound, width of dadoing is equal, smooth and bright. If it is wrongly connected, arc is not stable and sends out inconsistently blare sound.

- **Current and carbon rod diameter**

Current is proportional to carbon rod diameter. Generally consult the follow formula to choose current:

I=(30～50)D

I- Welding current（A）

D- Carbon rod diameter（mm）

For a certain diameter carbon rod, if current is small, then arc is not stable, and carbon inclusion defect occurs easily; increase current appropriately, can improve gouging speed, smooth surface of dadoing, increase its width. In practice, choose larger current generally. But if current is over, carbon rod burns quickly, even melt, cause serious carburize. Diameter chosen for carbon rod is according to dadoing width, the bigger of diameter, and the broader of dadoing is. Generally, diameter is 2~4 mm smaller than dadoing width. Carbon rod standard and suitable current, please refer to the following table:

Table 7-4-1: Carbon rod standard and suitable current

Sectional form shape	Carbon rod standard /mm	Suitable current/A
Round	φ3×355	150～180
	φ4×355	150～200
	φ5×355	150～250
	φ6×355	180～300
	φ7×355	200～350
	φ8×355	250～400
	Φ9×355	350～450
	φ10×355	350～500
Square	3×12×355	200～300
	4×8×355	180～270
	4×12×355	200～400
	5×10×355	300～400
	5×12×355	350～450
	5×15×355	400～500
	5×18×355	450～550
	5×20×355	500～600

- **Gouging speed**

Gouging speed influences dadoing size, surface quality and stability during gouging. Gouging speed should in accordance with current and depth of dadoing (or angle between carbon rod and work piece). If gouging speed is too quick, it is easy to cause short circuit between carbon rod and metal, arc extinguish, carbon inclusion. Usually gouging speed is better around 0.5~1.2m/min.

- **Pressure of compressed air**

Pressure of compressed air can directly influence gouging speed and dadoing surface quality. If pressure is high, can improve gouging speed and dadoing surface smooth degree; if pressure is low, easy to cause slag inclusion on dadoing surface. Usually pressure is 0.4~0.6Mpa. Moisture content and oil content in compressed air can be taken by filter unit installed in compressed air pipeline.

- **Extension length of carbon rod**

Extension length is carbon length from tip to end of carbon rod. In manual CAC-A, extension length is long, tip of compressed air is far from arc, cause lack of wind power, can not blow off slag, and carbon rod is easy to break. Usually extension length is better 80~100mm, along with carbon rod burn, extension length becomes shorter, when extension length decreases to 20~30mm, should adjust it back to 80~100mm.

- **Angle between carbon rod and work piece**

Angle “a” between carbon rod and work piece mainly influences dadoing depth and gouging speed. When angle increases, then gouging depth increases, gouging speed decreases. Usually in manual CAC-A, angle is better around $45^{0.}$

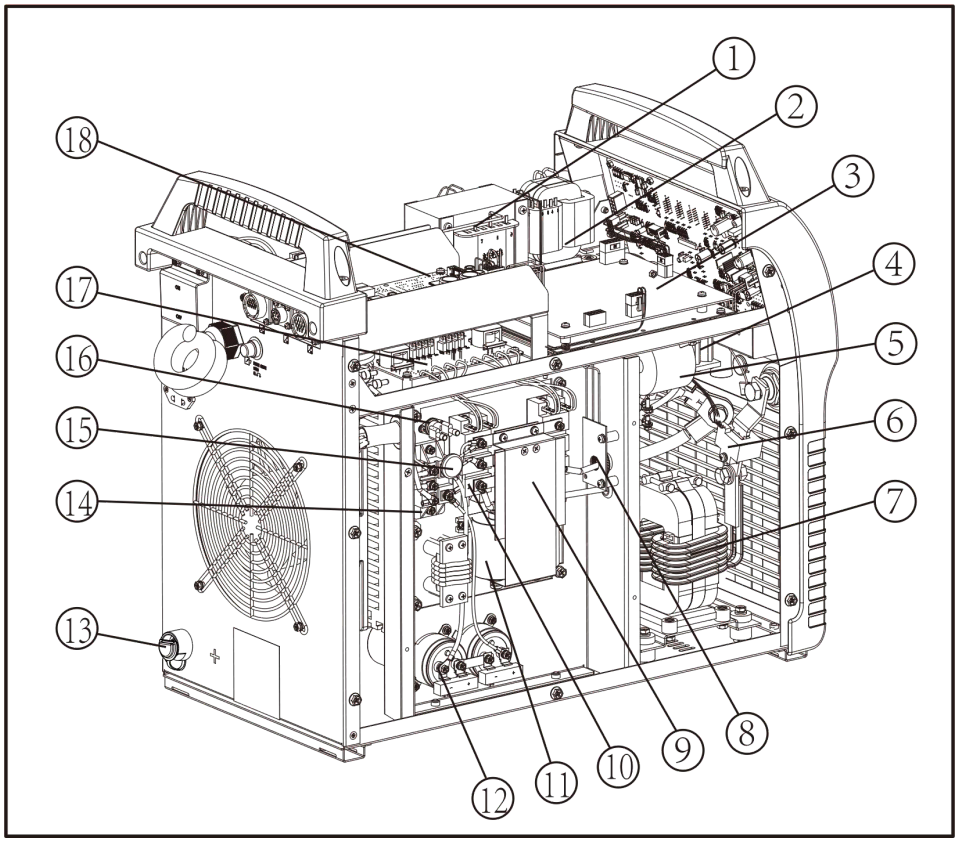
1
2
3
4
5
6
7
8
9
10
11
12
13
14
15
16
17
18

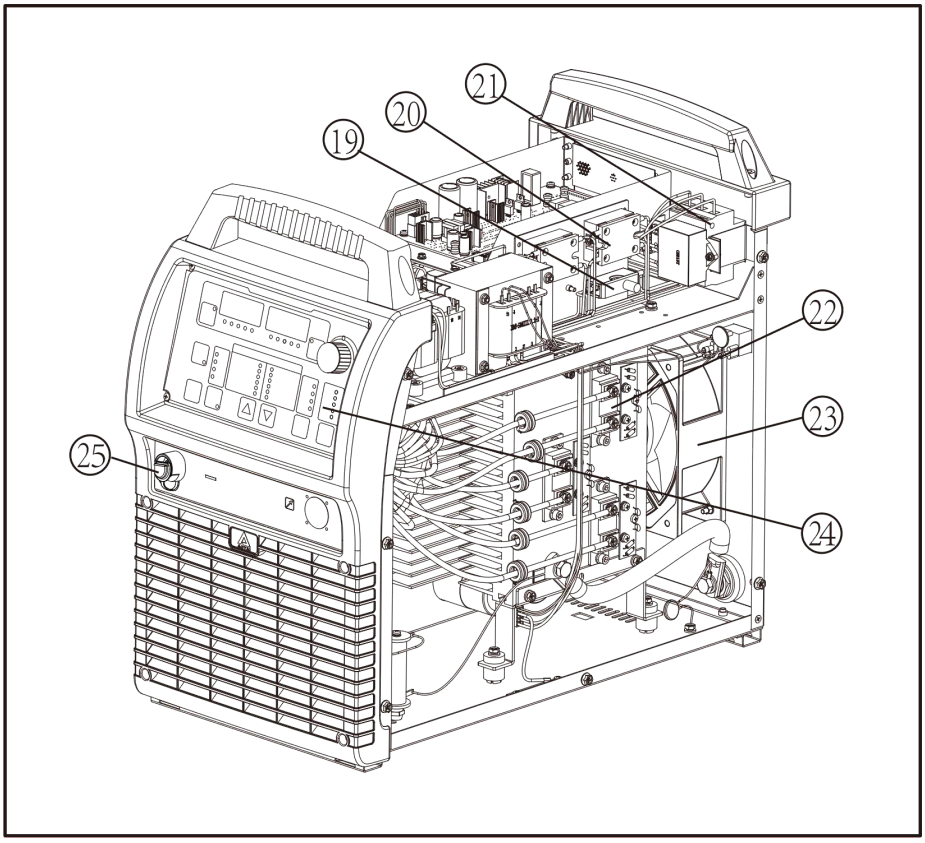
19
20
21
22
23
24
25

No.	Item	Stock No.for 3500	Stock No.for 5000	SAP KODU Stock No.for 3500	SAP KODU Stock No.for 5000
1	Power transformer II	763001-00048	763001-00048	6064000403	6064000403
2	Power transformer I	763001-00049	763001-00049	6064100514	6064100514
3	Main control board	210580-01609	210580-01609		
4	Current exchange inductor	220281-00008	220281-00008	6064100227	6064100227
5	Polypropylene capacitor	722001-00074	722001-00074	6064100154	6064100154
6	Current sensor	753001-00020	753001-00020	6064100165	6064100165
7	Output reactor	763004-00174	763004-00174		
8	Current transformer	220149-00136	220149-00136	6064000415	6064000415
9	IGBT protection board	220005-00172	220005-00171		
10	IGBT module	735007-00038	735007-00038	6064100175	6064100175
11	Polypropylene capacitor	722001-00070	722001-00070	6064100163	6064100163
12	Aluminum electrolytic capacitors	722004-00162	722004-00162		
13	Cable socket(red)	740002-00027	740002-00027	6064200534	6064200534
14	Three phase rectifier module	735005-00002	735005-00002	6064100220	6064100220
15	Varistor	720021-00017	720021-00017	6064100167	6064100167
16	Temperature relay	745008-00042	745008-00042	6064100613	6064100613
17	Drive board	210310-00118	210310-00118	6064000406	6064000406
18	Wire feeder control box	210580-00822	210580-00822	6064000409	6064000409
19	Fuse	745007-00011	745007-00011	6064100190	6064100190
20	Solid state relay	715004-00014	715004-00014	6064100394	6064100394
21	Main circuit breaker	745011-00022	745011-00022	6064200131	6064200131
22	Fast recovery diode module	735006-00029	735006-00029	6064100173	6064100173
23	Fan	746001-00087	746001-00087	6064100525	6064100525
24	Display board	220503-00250	220503-00261		
25	Cable socket	740002-00027	740002-00027	6064200534	6064200534
	Filter	752004-00017	752004-00017	6064000421	6064000421

Manufacturer

Üretici: Shandong Aotai Electric Co., LTD.
Üretici Adresi: 282 Bole Ave, High-tech Development Zone, Jinan, Shandong 250101, P.R. China
İletişim bilgileri:
Tel: +86-531-81921006
Fax: +86-531-88876665

Importer
İthalatçı: Gedik Kaynak San ve Tic A.Ş.
İthalatçı Adresi: Ankara Cad No: 306 Seyhli 34906 Pendik, İstanbul/Türkiye
İletişim Bilgileri:
Tel: +90-216-3785000
Fax: +90-216 3782044